STS-114/LF1

FD 06 Execute Package

MSG	Page(s)	Title
049A	1 - 16	FD06 Flight Plan Revision **(pdf)**
050A	17 - 19	FD06 Mission Summary **(pdf)**
051	20 - 42	FD06 Transfer Message **(pdf)**
052A	43 - 44	FD06 Water Management Summary **(pdf)**
053	---	FD05 MMT Summary **(pdf - Electronic Only)**
054	---	FD06 PAO Event Summary 1 **(pdf - Electronic Only)**
055	---	FD06 PAO Event Summary 2 **(pdf - Electronic Only)**

Approved by FAO: *L. DeLapp*
OPS Plan: *J. Aldape*

Last Updated: Jul 31 2005 3:11AM GMT
JEDI *(**J**oint **E**xecute package **D**evelopment and **I**ntegration), v2.04.0003*

MSG INDEX

MSG NO.	TITLE
49	FD06 Flight Plan Revision
50	FD06 Mission Summary (11-0671)
51	FD06 Transfer Message (11-0673)
52	FD06 Water Management Summary
53	FD05 MMT Summary (11-0675)
54	FD06 PAO Event Summary 1
55	FD06 PAO Event Summary 2 (11-0676)

1. Post Sleep Cryo Config

   R1 CRYO O2, H2 MANF VLV TK1 (two) - OP (tb - OP)

2. Great job on the EVA yesterday to all. Tomorrow is another big day that we are all looking forward to. Just a reminder that we need the following items from the MPLM prior to 10.2 depress today. I'm sure that Wendy is all over it, and already has it on her list, but just in case here it is again:

   11/16-in Box End Wrench
   APFR Ingress Aid
   PGT
   MUT EE

   A special thank you goes to Andy for his wave yesterday. A double right back at ya!

3. Soichi and Steve,

   Thanks for a job well done on the MISSE retrievals! We appreciate your dedication and hard work. We are looking forward to the installation of MISSE5 on EVA3/FD9. Thanks again!

4. AFD PCS Question from ODIN

   We have observed the AFD PCS disconnect and reconnect twice from the ISS. The first disconnect was at MET 002/16:41 with reconnect at 002/18:35. The second disconnect was at 003/20:21 with reconnect at 003/20:26. We are trying to gather any information about the disconnects in order to troubleshoot for any problems.

   Were you aware of either of these events and do you have any insight into them? Was the crew configuring or operating the AFD PCS during those times?

5. Sensor package 1 playback video time has been added to the timeline at MET 4/18:15. The following are the estimated times for playback:

   GMT 211/16:06 to 16:11
   211/16:22 to 16:30
   211/16:40 to 17:02

6. The following should be performed to allow you to move e-mail messages from your Work Related folder to your Personal Folder:

   1 - In Outlook, right click on the "Work Related" folder
   2 - Select "Properties"
   3 - On the "Work Related Properties" dialog, select the "Synchronization" tab
   4 - In the "This Folder is available" section of the dialog, select the "When offline or online" option.
   5 - Click OK

   Note: it is not necessary to exit and re-open Outlook for this to take effect.

7. There are no exercise constraints for FD06

8. REPLACE PAGES 2-12A THROUGH 2-13B AND 3-56 THROUGH 3-65.

07/30/05 22:03:31 **REPLANNED**

GMT 07/31/05 (212) 03 04 05 06 07 08 09 10 11 12 13 14

MET Day 004 12 13 14 15 16 17 18 19 20 21 22 23 005/00

STS-114	CDR COLLINS	SLEEP; FD06 POST SLEEP; H2O RVW; MNVR ^ FTR LOAD POST SLEEP; WIN ITT E; C/O COND; WASTE TERM; PWR DUMP; CWC DUMP; M-XLV; ATTHO*; I'CNCT; EXERCISE; O2 TERM; PAO EVENT; MEAL; CWC INIT 8; PAO EVENT; FC*; CWC TERM; XFER CWC
STS-114	PLT KELLY	SLEEP; SALIVA; POST SLEEP; I'CNCT; POST SLEEP; WIN ITT E; O2 INIT; WCS CK; WASTE TERM; PWR DUMP; CWC DUMP; VTR PB; TRANSFER; PAO EVENT; MEAL; TRANSFER; EXERCISE; SSRMS CMG EVA S/U
STS-114	MS1 NOGUCHI	SLEEP; POST SLEEP - GIRA; EXERCISE; ASPRN; EVA TOOL CLNUP /STOW; MDDK PREP; EVA TOOL CONFG; PGT C/O; EVA CAMR; MEAL; XFER; PAO EVENT; TRANSFER; CREW CHOICE; XFER
STS-114	MS2 ROBINSON	SLEEP; POST SLEEP; EXERCISE; POST SLEEP; ASPRN; EVA TOOL CLNUP /STOW; MDDK PREP; EVA TOOL CONFG; DCS FMT; TRANSFER; MEAL; XFER; PAO EVENT; TRANSFER
STS-114	MS3 THOMAS	SLEEP; POST SLEEP; DCS; CHRG; REBA-T; LB/EMU; ATT; EMU H2O RCHG; BSA-I; EVA TOOL CONFG; DCS FMT; TRANSFER; MEAL; TRANSFER; CREW CHOICE; XFER
STS-114	MS4 LAWRENCE	SLEEP; SALIVA; LOG; POST SLEEP; XFER REVIEW; LIOH XCHG; EXERCISE; TRANSFER; P/TV05; S/U; XFER; MEAL; TRANSFER; SSRMS CMG EVA S/U
STS-114	MS5 CAMARDA	SLEEP; SALIVA; LOG; POST SLEEP; XFER REVIEW; EXERCISE; TRANSFER; PAO EVENT; MEAL; TRANSFER
ISS	ISS CDR KRIKALEV	SLEEP; POST SLEEP; PCS; DPC; XFER REVIEW; TRANSFER; TVIS; MIDDAY-MEAL; TRANSFER; VELO + HC
ISS	FE-1 PHILLIPS	SLEEP; POST SLEEP; CWC; DPC; PREP WORK; CWC-T; TRANSFER; ♣; EXERCISE RED; MIDDAY-MEAL; PAO PREP; PAO EVENT; TRANSFER

DAY/NIGHT

ORBIT 72 73 74 75 76 77 78 79 80

TDRS E -46.0 W -171.0 Z -275.0

ORB ATT BIAS -XLV -ZVV; DUMP BIAS; BIAS -XLV -ZVV

NOTES ♣CMS-RED-INSPECT_1 *STS TO CMG *PURGE-MANUAL

ISS-11 SHORT TERM PLAN PAYLOAD PAGE

CT 07/30/05 (211) 22 03 | 23 04 | 07/31 05 | 01 06 | 02 07 | 03 08 | 04 09 | 05 10 | 06 11 | 07 12 | 08 13 | 09 14

GMT 07/31/05 (212)

ISS

DAY/NIGHT	
ORBIT	2259 | 2260 | 2261 | 2262 | 2263 | 2264 | 2265 | 2266 | 2267
DAILY ORBIT	14 | 15 | 1 | 2 | 3 | 4 | 5 | 6 | 7
TDRS AVAIL	
VHF	ALL VHF; ALL VHF; ALL VHF; ALL VHF; ALL VHF; ALL VHF; ALL VHF

KU SYS

- CHECS-KU-D/L: CHECS-KU-D/L
- LOCK-OPS-RECORDER: LOCK-OPS-RECORDER
- OCA-MAIL-SYNC: OCA-MAIL-SYNC
- IMS-AUTO-IMPRT/EXPRT: IMS-AUTO-IMPRT/EXPRT

SBD

- ACS-CMG-SPINUP: ACS-CMG-SPINUP
- ACS-CMG3-RMV-SL: ACS-CMG3-RMV-SL
- CPO/PRO-EXPRS1-CMD: CPO/PRO-EXPRS1-CMD; CPO/PRO-EXPRS1-CMD
- RS-CONTG-TLM: RS-CONTG-TLM
- PPS-P6-SA-AUTO: PPS-P6-SA-AUTO
- ACS-POSTN-CMG-GMBLS: ACS-POSTN-CMG-GMBLS
- ISS-PWR-DWN: ISS-PWR-DWN
- DPC: DPC
- PPS-SA-FTHR: PPS-SA-FTHR
- AR-MCA RAPID-SMPL: AR-MCA RAPID-SMPL
- ACS-CMG-INCORP-SL: ACS-CMG-INCORP-SL
- ENA-CMG-RETRY: ENA-CMG-RETRY
- PPS-SA-AUTOTRACK: PPS-SA-AUTOTRACK
- ISS-PWR-UP: ISS-PWR-UP
- ACS-CMG-DATA-DUMP: ACS-CMG-DATA-DUMP
- ACS-STS/CMG ATT-H/O: ACS-STS/CMG ATT-H/O
- PPS-SA-KOZ-U/L: PPS-SA-KOZ-U/L
- LOCK-OPS-RECORDER: LOCK-OPS-RECORDER
- ACS-AH-MOM-MGMT-USTO: ACS-AH-MOM-MGMT-USTO
- CMG-SAT-THRSHOLD: CMG-SAT-THRSHOLD
- PPS-SA-KOZ: PPS-SA-KOZ
- SAMS-SENSOR-ACT-CMD: SAMS-SENSOR-ACT-CMD
- MSS-POWERUP: MSS-POWERUP
- AR-MCA AUTO-SEQ: AR-MCA AUTO-SEQ
- C&T-VIDEO CNFG: C&T-VIDEO CNFG
- SSRMS-OCAS-DUMP: SSRMS-OCA

UNTPL

- PCG STES-010-GROWTH: PCG STES-
- EXPRS1-SYS-PWR/THERM: EXPRS1-SY
- EXPRS4-SYS-PWR/THERM: EXPRS4-SY
- MAMS-P/L-NOM OPS: MAMS-P/L-
- SAMS-ICU/D1-OPS: SAMS-ICU/
- SAMS-RTS/D1-OPS: SAMS-RTS/
- SAMS-RTS/D2-OPS: SAMS-RTS/
- CPO/PRO-EXPRS1-CMD: CPO/PRO-EXPRS1-CMD; CPO/PRO-EXPRS1-CMD
- CPO-MAMS-CMD: CPO-MAMS-CMD
- PRO-EXPRS FILE-CMD: PRO-EXPRS FILE-CMD
- SAMS-SENSOR-ACT-CMD: SAMS-SENSOR-ACT-CMD

RS

MCC

- CHECS-KU-D/L: CHECS-KU-D/L
- MCC-H FCT H/O (3/1): MCC-H FCT H/O (3/1)
- RS-CONTG-TLM: RS-CONTG-TLM
- ACS-STS/CMG ATT-H/O: ACS-STS/CMG ATT-H/O
- ACS-AH-MOM-MGMT-USTO: ACS-AH-MOM-MGMT-USTO
- MCC-H FCT H/O (1/2): MCC-H FCT H/O (1/2)

ISS ATTITUDE

-XVV +ZLV | -XVV +ZLV BIAS | -XVV +ZLV TEA

*STS TO CMG

*STS TO CMG

NOTES:

07/30/05 22:03:31 **REPLANNED**

GMT 07/31/05 (212) FD6 005/00 15 16 17 18 19 20 21 22 23 08/01 01 02
MET Day 005 01 02 03 04 05 06 07 08 09 10 11 12

STS-114	CDR COLLINS	EVA REVW; PRE SLEEP; PREP; 10.2 DPRS; CNFG; PRE SLEEP; PMC OCA; PRE SLEEP; SLEEP
STS-114	PLT KELLY	EVA REVW; PRE SLEEP; ISS EGRS; ATTHO*; PRE SLEEP; ATTHO*; PRE SLEEP; SLEEP
STS-114	MS1 NOGUCHI	EVA REVW; P/B INIT; PRE SLEEP; P/B TERM; PRE SLEEP - GIRA; SLEEP
STS-114	MS2 ROBINSON	EVA REVW; P/B INIT; PRE SLEEP; P/B TERM; PRE SLEEP; SLEEP
STS-114	MS3 THOMAS	EVA REVW; PRE SLEEP; EXERCISE; PRE SLEEP; SLEEP
STS-114	MS4 LAWRENCE	EVA REVW; XFER TAGUP; XFER CALL; ISS EGRS; PRE SLEEP; SLEEP
STS-114	MS5 CAMARDA	EVA REVW; PRE SLEEP; PREP; 10.2 DPRS; CNFG; PRE SLEEP; SLEEP
ISS	ISS CDR KRIKALEV	EVA REVW; XFER TAGUP; IMS; COX; DPC; PRE SLEEP; SLEEP
ISS	FE-1 PHILLIPS	EVA REVW; TVIS; JRNL; DPC; PRE SLEEP; SLEEP

DAY/NIGHT

ORBIT 80 81 82 83 84 85 86 87 88

TDRS E -46.0 W -171.0 Z -275.0

ORB ATT BIAS -XLV -ZVV

NOTES
*CMG TO STS
*STS TO CMG

ISS-11 SHORT TERM PLAN PAYLOAD PAGE

CT 07/31/05 (212): 10 11 12 13 14 15 16 17 18 19 20 21
GMT 07/31/05 (212): 15 16 17 18 19 20 21 22 23 08/01 01 02

ISS

DAY/NIGHT								
ORBIT	2267	2268	2269	2270	2271	2272	2273	2274
DAILY ORBIT	7	8	9	10	11	12	13	14 15
TDRS AVAIL								
VHF					ALL VHF	ALL VHF	ALL VHF	ALL VHF ALL VHF

KU SYS

- OCA-MAIL-SYNC: OCA-MAIL-SYNC; OCA-MAIL-SYNC
- LOCK-OPS-RECORDER: LOCK-OPS-RECORDER
- IMS-AUTO-IM/EX W/PIP: IMS-AUTO-IM/EX W/PIP
- CHECS-KU-D/L: CHECS-KU-D/L

SBD

- SSRMS-OCAS-DUMP: SSRMS-OCAS-DUMP
- CPO-MAMS DATA-D/L: CPO-MAMS DATA-D/L
- RS-CONTG-TLM: RS-CONTG-TLM; RS-CONTG-TLM; RS-CONTG-TLM
- C&T-VIDEO-DECONFG: C&T-VIDEO-DECONFG
- IMV-DEACT: IMV-DEACT
- MSS-POWERDOWN: MSS-POWERDOWN
- ACS-CMG-DATA-DUMP: ACS-CMG-DATA-DUMP
- ACS-CMG/STS ATT-H/O: ACS-CMG/STS ATT-H/O
- LOCK-OPS-RECORDER: LOCK-OPS-RECORDER
- DPC: DPC
- ACS-STS/CMG ATT-H/O: ACS-STS/CMG ATT-H/O
- ACS-AH-MOM-MGMT-USTO: ACS-AH-MOM-MGMT-USTO
- CMG-SAT-THRSHOLD: CMG-SAT-THRSHOLD
- CHECS-COMMANDING: CHECS-COMMANDING; CHECS-COMMANDING
- ACS-ENA-AUTO-H/O-RS: ACS-ENA-AUTO-H/O-RS
- SBD-KEY-CHG: SBD-KEY-CHG

UNTPL

- PCG STES-010-GROWTH: PCG STES-
- EXPRS1-SYS-PWR/THERM: EXPRS1-SY
- EXPRS4-SYS-PWR/THERM: EXPRS4-SY
- MAMS-P/L-NOM OPS: MAMS-P/L-
- SAMS-ICU/D1-OPS: SAMS-ICU/
- SAMS-RTS/D1-OPS: SAMS-RTS/
- SAMS-RTS/D2-OPS: SAMS-RTS/
- CPO-MAMS DATA-D/L: CPO-MAMS DATA-D/L
- MAMS-P/L-COMMANDING: MAMS-P/L-COMMANDING
- PRO-EXPRS FILE-CMD: PRO-EXPRS FILE-CMD

RS

MCC

- RS-CONTG-TLM: RS-CONTG-TLM; RS-CONTG-TLM; RS-CONTG-TLM
- ACS-STS/CMG ATT-H/O: ACS-STS/CMG ATT-H/O
- ACS-AH-MOM-MGMT-USTO: ACS-AH-MOM-MGMT-USTO
- CHECS-COMMANDING: CHECS-COMMANDING; CHECS-COMMANDING
- MCC-H FCT H/O (2/3): MCC-H FCT H/O (2/3)
- CHECS-KU-D/L: CHECS-KU-D/L
- MCC-H FCT H/O (3/1): MCC-H FCT

ISS ATTITUDE: -XVV +ZLV TEA

*CMG TO STS
*STS TO CMG
*STS TO CMG

NOTES:

STS-114 LF1 (FD 06)

REPLANNED

GMT Date 07/31 (212) | TDRS E W Z | ORB | MET Day 004 | STS ATI

FD06

MET	CDR COLLINS	PLT KELLY	MS1 NOGUCHI	MS2 ROBINSON	MCC
12:00					
03:00	SLEEP	SLEEP	SLEEP	SLEEP	
13:00			**FD06 EZ ACTIVITIES** HARD REBOOT PGSC (not WLES) OCAC FILTER INSPECT TEPC (STATUS CK) (ORB OPS, CREW SYS) L17 Check MCIU Filter Screen		
04:00		SALIVA COLLECT (ORB OPS, DSO)			
14:00	POST-SLEEP ACTIVITY (ORB OPS, CREW SYS)	POST-SLEEP ACTIVITY (ORB OPS, CREW SYS)	POST SLEEP ACTIVITY (ORB OPS, CREW SYS) GALLEY MORNING CONFIG (ORB OPS, ECLS)	POST-SLEEP ACTIVITY (ORB OPS, CREW SYS)	
05:00					
15:00	WATER REVIEW REF. MSG 052	I'CNCT TK SWITCH:FROM L TO R OMS FEED (OPCL, RCS) ~~A14 RCS/OMS HTR L POD(two) A~~ AUTO,B OFF			
06:00	POST-SLEEP ACTIVITY (ORB OPS, CREW SYS)	POST-SLEEP ACTIVITY (ORB OPS, CREW SYS)	EXERCISE	EXERCISE POST-SLEEP ACTIVITY (ORB OPS, CREW SYS)	
16:00	< MNVR FTR LOAD BIAS -XLV -ZVV				

BIAS -XLV -ZVV

ORB: 72, 73, 74

STS-114 LF1 (FD 06)

REPLANNED

GMT Date 07/31 (212) | TDRS E W Z | ORB | MET Day 004 | STS ATI

FD06

03:00 — 04:00 — 05:00 — 06:00

ORB: 72, 73, 74

12:00 — 13:00 — 14:00 — 15:00 — 16:00

STS ATI: BIAS-XLV-ZVV

MS3 THOMAS	MS4 LAWRENCE	MS5 CAMARDA	MCC
SLEEP	SLEEP	SLEEP	
	SALIVA COLLECT (ORB OPS, DSO) FLIGHT SLEEP LOG (ORB OPS, DSO)	SALIVA COLLECT (ORB OPS, DSO) FLIGHT SLEEP LOG (ORB OPS, DSO)	
POST-SLEEP ACTIVITY (ORB OPS, CREW SYS)	POST-SLEEP ACTIVITY (ORB OPS, CREW SYS)	POST-SLEEP ACTIVITY (ORB OPS, CREW SYS)	

STS-114 LF1 (FD 06)

REPLANNED

GMT Date 07/31 (212) | TDRS E W Z | ORB | MET Day 004 | STS ATI

CDR COLLINS

16:00
- SUPPLY/WASTE WATER DUMP (ORB OPS, ECLS) Initiate Waste Dump REF. MSG 052
- SHUTTLE CONDENSATE COLLECTION (ORB OPS, ECLS) Perform CHANGEOUT REF. MSG 052

17:00
- SUPPLY/WASTE WATER DUMP (ORB OPS, ECLS) Terminate Waste Dump
- PWR DUMP-WASTE LINE (ORB OPS, ECLS) S/N 1005,1008,1011,1012 REF. TRANSFER LIST ITEM# 480b REF. MSG 052
- CWC OVERBOARD DUMP (ORB OPS, ECLS) S/N 1027 REF. MSG 052

18:00
- MNVR (TRK) BIAS -XLV -ZVV TG=2 BV=5 P=155 Y=0 OM=178 A12/AUTO/VERN Init TRK
- 3.111 H/O ATT CONTROL ORB TO CMG (JOINT OPS, MATED OPS)
- I'CNCT RETURN (OPS 2,3) (OPCL, RCS)

19:00
- EXERCISE

20:00
- O2 REPRESS USING PL O2 VLV(TERM) (ORB OPS, ECLS) Steps 7-10 MCC will TMBU S/W limits

PLT KELLY

- SUPPLY/WASTE WATER DUMP (ORB OPS, ECLS) Initiate Waste Dump REF. MSG 052
- O2 REPRESS USING PL O2 VLV(INIT) (ORB OPS, ECLS) Steps 1-4,6 MCC will TMBU S/W limits
- √ WCS hose block filter
- SUPPLY/WASTE WATER DUMP (ORB OPS, ECLS) Terminate Waste Dump
- PWR DUMP-WASTE LINE (ORB OPS, ECLS) S/N 1005,1008,1011,1012 REF. TRANSFER LIST ITEM# 480b REF. MSG 052
- CWC OVERBOARD DUMP (ORB OPS, ECLS) S/N 1027 REF. MSG 052
- PLAYBACK (DIGITAL) (PHOTO/TV, CUE CARD) KU TDRW (18:19 - 18:56) REF. MSG 049 ITEM 5
- TRANSFER Ref. MPLM TRANSFER LIST

MS1 NOGUCHI

- EXERCISE
- TAKE 1 ASPIRIN (325mg)
- EVA 1 TOOL CLEANUP AND STOW (EVA, TOOLS AND STOWAGE)
- MIDDECK PREP (EVA, EVA PREP) Use HL batts per EMU Consumables CC
- EVA 2 TOOL CONFIG (EVA, EVA 2)
- PGT CHECKOUT (EVA, TOOLS & STOWAGE)

MS2 ROBINSON

- POST-SLEEP ACTIVITY (ORB OPS, CREW SYS)
- TAKE 1 ASPIRIN (325mg)
- EVA 1 TOOL CLEANUP AND STOW (EVA, TOOLS AND STOWAGE)
- MIDDECK PREP (EVA, EVA PREP) Use HL batts per EMU Consumables CC
- EVA 2 TOOL CONFIG (EVA, EVA 2)
- 760 FULL FORMAT (PHOTO/TV, DCS 760 EVA)
- TRANSFER Ref. MPLM TRANSFER LIST

MCC

- UPDATE H2O WASTE DUMP QTY

STS-114 LF1 (FD 06)

REPLANNED

GMT Date 07/31 (212) | TDRS E W Z | ORB 75 76 77 | MET Day 004 | STS ATI DUMP BIAS BIAS-XLV-ZVV

MS3 THOMAS

- POST-SLEEP ACTIVITY (ORB OPS, CREW SYS)
- DCS BATT CHARGING (PHOTO/TV, BATTS & FUSES) Charge 2 Batts/1 Charger/3hrs
- REBA BATTERY RECHARGE (Term) (EVA, EMU MAINT/RECHARGE)
- EMU LIOH CHANGEOUT (EVA, EMU MAINT/RECHARGE) A
- WATER RECHARGE (EVA, EMU MAINT/RCHG)
- 1.605 BSA BATTERY RECHARGE(INIT) (ISS EVA SYS, BATTERY OPS) B
- EVA 2 TOOL CONFIG (EVA, EVA 2)
- 760 FULL FORMAT (PHOTO/TV, DCS 760 EVA)
- TRANSFER Ref. MPLM TRANSFER LIST

MS4 LAWRENCE

- TRANSFER REVIEW Update Transfer List per MSG 051
- PERFORM LiOH EXCHANGE PART C (CUE CARD)
- A Transfer LiOH/batts from MDDK EMUs to Ng/Rb EMUs. Install EVA 1 Metox in MDDK EMUs.
- B Init on EVA 1 PGT, HL,EMU batts
- EXERCISE
- TRANSFER Ref. MPLM TRANSFER LIST
- P/TV05 ISS INTERNAL OPS (S/U) (PHOTO/TV, SCENES) PAO

MS5 CAMARDA

- TRANSFER REVIEW Update Transfer List per MSG 051
- EXERCISE
- TRANSFER Ref. MPLM TRANSFER LIST

MCC

STS-114 LF1 (FD 06)

REPLANNED

GMT Date 07/31 (212) | TDRS E W Z | ORB 77 78 79 80 | MET Day 004 | STS ATI

MET	CDR COLLINS	PLT KELLY	MS1 NOGUCHI	MS2 ROBINSON	MCC
20:00	PUBLIC AFFAIRS EVENT KU AVAIL TDRW 20:00-20:20 REF MSG 054	PUBLIC AFFAIRS EVENT KU AVAIL TDRW 20:00-20:20 REF MSG 054	SETUP: 760 EVA-CAMR ONLY (PHOTO/TV, DCS 760 EVA) Use 28mm EVA Lens	TRANSFER Ref. MPLM TRANSFER LIST	
21:00	MEAL	MEAL	MEAL	MEAL	
22:00	SHUTTLE/ISS H2O CONT FILL (ORB OPS, ECLS) INIT #8 REF. MSG 052	TRANSFER Ref. MPLM TRANSFER LIST	TRANSFER Ref. MPLM TRANSFER LIST	TRANSFER Ref. MPLM TRANSFER LIST	
	PUBLIC AFFAIRS EVENT KU AVAIL TDRW 21:40-22:00 REF MSG 055		PUBLIC AFFAIRS EVENT KU AVAIL TDRW 21:40-22:00 REF MSG 055	PUBLIC AFFAIRS EVENT KU AVAIL TDRW 21:40-22:00 REF MSG 055	
			TRANSFER Ref. MPLM TRANSFER LIST	TRANSFER Ref. MPLM TRANSFER LIST	
23:00	FC PURGE - MANUAL (ORB OPS, EPS)				
	SHUTTLE/ISS H2O CONT FILL (ORB OPS, ECLS) TERM Report Barcode & S/N to MCC	EXERCISE			
00:00		1.511 CMG R&R EVA SETUP (ROBOTICS, CMG R&R EVA SPT)	CREW CHOICE VIDEO KU AVAIL TDRw 23:20-23:35		
			TRANSFER Ref. MPLM TRANSFER LIST		
	CWC TRANSFER Xfer 1 CWC bag to ISS				

BIAS-XLV-ZVV

STS-114 LF1 (FD 06)

REPLANNED

GMT Date 07/31 (212) | TDRS E W Z | ORB | MET Day 004 | STS ATI

MS3 THOMAS

20:00 — TRANSFER
Ref. MPLM TRANSFER LIST

21:00 — MEAL

TRANSFER
Ref. MPLM TRANSFER LIST

22:00 — BIAS-XLV-ZVV

23:00 — CREW CHOICE VIDEO
KU AVAIL TDRw 23:20-23:35

TRANSFER
Ref. MPLM TRANSFER LIST

00:00

MS4 LAWRENCE

TRANSFER
Ref. MPLM TRANSFER LIST

MEAL

TRANSFER
Ref. MPLM TRANSFER LIST

1.511 CMG R&R EVA SETUP
(ROBOTICS, CMG R&R EVA SPT)

MS5 CAMARDA

PUBLIC AFFAIRS EVENT
KU AVAIL TDRW 20:00-20:20
REF MSG 054

MEAL

TRANSFER
Ref. MPLM TRANSFER LIST

MCC

11:00 — 77
12:00 — 78
13:00 — 79
14:00 — 80

STS-114 LF1 (FD 06)

REPLANNED

GMT Date 07/31 (212) | TDRS E W Z | ORB 80 81 82 | MET Day 005 | STS ATI

CDR COLLINS | PLT KELLY | MS1 NOGUCHI | MS2 ROBINSON | MCC

00:00
- EVA 2 BRIEFING CARD (EVA, EVA 2) — CDR, PLT, MS1, MS2
- MASK PREBREATHE INITIATE (EVA, 10.2 PSI CABIN) — MS1, MS2

01:00
- PRE-SLEEP ACTIVITY (ORB OPS, CREW SYS) — CDR
- PRE-SLEEP ACTIVITY (ORB OPS, CREW SYS) — PLT
- ISS EGRESS FOR SHUTTLE EVA (EVA, DEPRESS/REPRESS) Steps 1-5 ONLY — PLT
- PREP FOR 10.2 PSI CABIN (EVA, 10.2 PSI CABIN) Steps 4 (FES) and 11 (FDA) are not req'd — CDR
- 3.110 H/O ATT CONTROL CMG TO ORB (JOINT OPS, MATED OPS) — PLT
- PRE-SLEEP ACTIVITY (ORB OPS, CREW SYS) — MS1, MS2

02:00
- CABIN DEPRESS TO 10.2 PSI (EVA, 10.2 PSI CABIN) — CDR
- PRE-SLEEP ACTIVITY (ORB OPS, CREW SYS) — PLT
- 3.111 H/O ATT CONTROL ORB TO CMG (JOINT OPS, MATED OPS) — PLT
- 10.2 PSI CABIN CONFIG (EVA, 10.2 PSI CABIN) MCC will TMBU S/W limits — CDR
- MASK PREBREATHE TERMINATE (EVA, 10.2 PSI CABIN) — MS1, MS2

03:00
- LDRI STATUS CHECK: R12(VPU) Green Jumper - LDRI/ITVC; R12(OBSS) ITVC ENA - ON — PLT
- PRE-SLEEP ACTIVITY (ORB OPS, CREW SYS) — CDR, PLT, MS1, MS2
- GALLEY OVERNIGHT CONFIG (ORB OPS, ECLS) — MS1

04:00
- NETMEETING SETUP (ORB OPS, PGSC) - PMC — CDR

MCC: UPLINK β 21° +C1,C2,C3; BOX C1 -19<AZ<52 -67<EL<75; BOX C2 -41<AZ<-10 -25<EL<39; BOX C3 -72<AZ<-36 -4<EL<33; OCA-PMC

STS-114 LF1 (FD 06)

REPLANNED

GMT Date 07/31 (212) | TDRS E W Z | ORB | MET Day 005 | STS ATI

MS3 THOMAS | MS4 LAWRENCE | MS5 CAMARDA | MCC

15:00 — 16:00 — 17:00 — 18:00

ORB: 80, 81, 82

BIAS-XLV-ZVV

00:00

EVA 2 BRIEFING CARD (EVA, EVA 2) — MS3, MS4, MS5

01:00

DAILY STS/ISS CREW TRANSFER TAGUP — MS4

DAILY TRANSFER BRIEFING — MS4

PRE-SLEEP ACTIVITY (ORB OPS, CREW SYS) — MS3

PRE-SLEEP ACTIVITY (ORB OPS, CREW SYS) — MS5

ISS EGRESS FOR SHUTTLE EVA (EVA, DEPRESS/REPRESS) Steps 1-5 ONLY — MS4

PREP FOR 10.2 PSI CABIN (EVA, 10.2 PSI CABIN) Steps 4 (FES) and 11 (FDA) are not req'd — MS5

02:00

CABIN DEPRESS TO 10.2 PSI (EVA, 10.2 PSI CABIN) — MS5

EXERCISE — MS3

10.2 PSI CABIN CONFIG (EVA, 10.2 PSI CABIN) MCC will TMBU S/W limits — MS5

PRE-SLEEP ACTIVITY (ORB OPS, CREW SYS) — MS4

03:00

PRE-SLEEP ACTIVITY (ORB OPS, CREW SYS) — MS5

PRE-SLEEP ACTIVITY (ORB OPS, CREW SYS) — MS3

04:00

STS-114 LF1 (FD 06)

REPLANNED

GMT Date 07/31 (212) | TDRS E W Z | ORB | MET Day 005 | STS ATI

CDR COLLINS	PLT KELLY	MS1 NOGUCHI	MS2 ROBINSON	MCC
NETMEETING SETUP (ORB OPS, PGSC) - PMC		PRE-SLEEP ACTIVITY (ORB OPS, CREW SYS)		OCA-PMC
PRE-SLEEP ACTIVITY (ORB OPS, CREW SYS)	PRE-SLEEP ACTIVITY (ORB OPS, CREW SYS)	GALLEY OVERNIGHT CONFIG (ORB OPS, ECLS)	PRE-SLEEP ACTIVITY (ORB OPS, CREW SYS)	
SLEEP	SLEEP	SLEEP	SLEEP	

CREW WAKEUP MET 5/12:30

BIAS-XLV-ZVV

ORB: 82, 83, 84, 85

GMT: 19:00, 20:00, 21:00, 22:00

MET: 04:00, 05:00, 06:00, 07:00, 08:00

STS-114 LF1 (FD 06)

REPLANNED

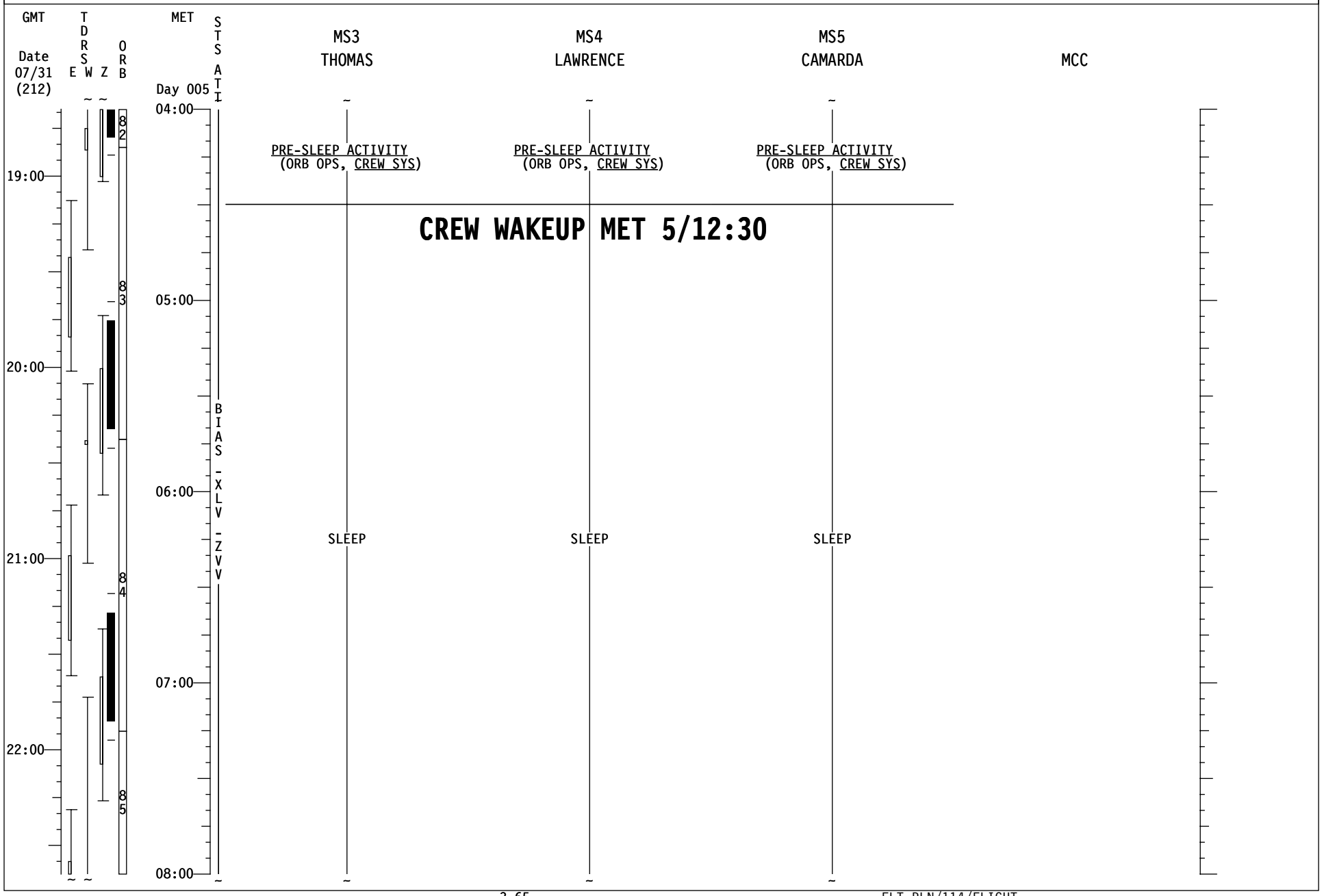

Good Morning Discovery!

Yesterday was awesome! Thanks for your great work. The EVA was flawless and you even completed some get ahead tasks.

Great job with the RCC surveys. Your technique of using the ITVC zoom setting and tweaking the SRMS position provided the best possible data collection on the areas of interest.

We have run out of superlative adjectives to describe your performance, so the MMT has decided to give you an extra docked day. (Actions speak louder than words.) The team is in the process of deciding what activities will be done on the extra day. Stay tuned.

The big changes for today's flight plan are the addition of the EMU water recharge and the SSRMS maneuver to the CMG R & R EVA Setup.

Have a good time with the transfer!

<u>ISS Summary</u>

1. We have good news on CMG2. Spin-up is complete and looks really good. We expect to have the CMG back into operation by about 4/18:30.

2. You may be aware we attempted to troubleshoot a 2.3lb/day leak in the ISS Crewlock. When the EV crew closed the manual isolation valve in the crew lock, they stopped any leak in the depress pump setup. With the crew lock open, we are unable to monitor the leak rate and can't be 100% sure the leak has stopped. If the leak was not in the depress pump setup, we can support the 2.3 lbm/day leak until the EV hatch is closed at the end of our EVAs.

YOUR CURRENT ORBIT IS: 193 X 187 NM

NOTAMS:

EDWARDS (EDW) – LAKEBED RWYS ELS ONLY - UNCERTIFIED
OCEANA (NTU) – RWY 23L/05R CLOSED
HALIFAX (YHZ) – RWY 06/24 CLOSED
GUAM (GUA) – RWY 06L/24R CLOSED
RIO GALLEGOS (AWG) – NOT APPROVED
ELMENDORF (EDF) – RWY 06/24 CLOSED
TINDAL (PTN) – RWY 14/32 CLOSED / TACAN TDL 70 UNUSABLE

NEXT 2 PLS OPPORTUNITIES:

EDW22 ORB 79 - 4/22:56
EDW22 ORB 95 - 5/23:22

OMS TANK FAIL CAPABILITY:

L OMS FAILS: NO
R OMS FAILS: NO

LEAKING OMS PRPLT BURN:

L OMS LEAK: ALWAYS BURN RETROGRADE
R OMS LEAK: ALWAYS BURN RETROGRADE

POST-TI OMS QUANTITIES(%)

L OMS OX = 35.2 R OMS OX = 36.6
FU = 35.6 FU = 37.3

SUBTRACT I'CNCT COUNTER FOR CURRENT OMS QUANTITIES

DELTA V AVAILABLE:	WITH MPLM	NO MPLM
OMS	320 FPS	303 FPS
ARCS (TOTAL ABOVE QTY1)	29 FPS	31 FPS
TOTAL IN THE AFT	349 FPS	334 FPS
ARCS (TOTAL ABOVE QTY2)	58 FPS	62 FPS
FRCS (ABOVE QTY 1)	29 FPS	32 FPS
AFT QTY 1	82 %	82%
AFT QTY 2	44 %	44%

SYSTEM	FAILURE	IMPACT	WORK AROUND
EVA 1	Unexpected grounding cable interfered with trunnion cover removal on ISS airlock trunnions. Trunnion covers were expected to be attached by Velcro only.	Crew was unable to completely remove trunnion covers, and return them to Houston.	Trunnion covers were removed far enough for ESPAD install, and left in place. No additional work arounds are expected.
EVA 2	Torque required to release ESPAD launch locking bolts (A, B, and C) exceeded spec. torque.	Additional crew time expended. Crew had to change PGT configuration and torque settings.	Crew released ESPAD bolts using a combination of 30.5 ft-lb (manual ratchet) and 25.5 ft-lb (B7 setting), on bolts A, B, and C.
EVA 3	EUTAS secondary compliant mount lock bolt release turn count was only 11 turns. 25 turns was expected w/ a minimum requirement of 15.	Additional crew time expended.	None. Crew verified nominal full range of motion.
A/L Hatch	Kicker dogs on latch #6 and #2 were on incorrect side (outside) of A/L flange.	Inability to close and latch A/L Hatch.	Manipulate hatch by shifting/rotating to gain alignment prior to latching.

Good morning Wendy, Charlie, and crew!

Today there are change pages to the Transfer List and new M-bag drawings for return packing. The changes to the Transfer List are detailed below. Charlie, be careful, we are adding another KURS!

The Transfer List Excel file, LF1_TransferList_FD06.xls, is located on the KFX machine in **C:\OCA-up\transfer.**

For ISS, the Transfer List Excel file, LF1_ TransferList_FD06.xls, is located in **K:\OCA-up\transfer.**

The Return Final Location Sort tab is not included in the electronic version and was not uplinked in this message today (working a format issue). We will provide this information in tomorrow's message.

<u>Transfer Notes</u>
Transfer the following items **before hatch close** today:

- **Items 174, 175, 184**: Required for EVA 2
- **Item 137**: Needed for CWC condensate fill
- **Item 153**: Needed for CWC fills

<u>Changes to the Transfer List are noted below</u>
Middeck Resupply List:

- Item 802 and 803: Added items

MPLM Resupply List:

- Item 163: Updated Notes column
- Item 194: Updated Stowage at Undock and Notes columns. Item removed from Swap List.

Swap List:

- Items: 194 and 486: Removed BBA swap
- Item 482.3: Updated s/n and qty

Middeck Return List:

- Item 706: Moved from Middeck to MPLM return

MPLM Return List:

- Items 406, 505, 711, 713, 714, 717, and 733: Updated Stowage at Undock.
- Items 465, 715-715.5: "*" added to Stowage at Undock
- Item 486: Stowage at Undock and Notes column updated. Item removed from swap tab because it will be timelined later in the flight.
- Item 706: Moved from Middeck to MPLM return
- Item 718: Item deleted from return
- Item 731: Updated Notes column
- Item 804-806: Added items

Transfer Notes
Pack the five single LiOH CTBs into the empty double LiOH CTB and stow the double on the FGB Deck. This bag will then be put away on ISS during unpack. We want to keep these for ULF1.1 transfer and prepack.

At this time, stow one half CTB from the P4 ZSR aft on ISS. Report to MCC-H serial number and barcode number of half left on ISS.

Pack the LiOH foam, that was removed from the launched LiOH bags, into the LiOH triples that are returning in MPLM. If any foam does not fit in the triples, pack the remaining foam into any RSR.

Have a great “transfa” day!
-The Transfer Team-

STS-114 / LF1 Resupply Transfer List

Chg Flag	☑	FD	Crew Initials	Item #	Item Name	Qty	Initial Stowage	Temp Stowage	Stowage at Undock	Tox Level	Wt (lbs)	PROCEDURES/**Constraints/** **Comments
			Real-Time Additions									
X				802	760XD BATTERY PACK [S/N 5129]	1	Aft FD		NOD1S4_B1 (in CTB S/N 1063)	2	1.76	**Do not transfer until FD10** **Remove from WinDecom PGSC s/n 5025
X				803	760XD BATTERY PACK [S/N 5102]	1	Aft FD		NOD1S4_B1 (in CTB S/N 1063)	2	1.76	**Do not transfer until FD10** **Remove from RPOP2 PGSC s/n 5094

[ ] - indicates note added by Transfer Team (not seen on actual label)
* in Stowage at Undock - if ESP-2 not installed on ISS
[ ] in Stowage Locations - indicates prior stowage locations

STS-114 / LF1 Resupply Transfer List

Chg Flag	☑	FD	Crew Initials	Item #	Item Name	Qty	Initial Stowage	Temp Stowage	Stowage at Undock	Tox Level	Wt (lbs)	PROCEDURES/**Constraints/** **Comments
				161	L&M TOOLS HRM RESUPPLY KIT	1 Hlf	MPL2S3_D1		NOD1D4 (Rack Front)	BA-2	14.76	**See following line item for ops.
				161.1	HRM RESUPPLY KIT	1	MPL2S3_D1 (inside item 161)		See Swap List	BA-2	Part of Above	**Reference Swap List for instructions for HRM Resupply Kit.
				162	Shuttle Crew Clothing [CDR]	1 Half	MPL2S3_D1		Middeck	N/A	12.67	
X				163	Triple CTB [Empty]	1	MPL2S3_D1		Near LAB window	N/A	6.20	**Use triple to pack KURS for return. Referenec item #804.
				164	HRF URINE CONTAINMENT BAG	2	MPL2S3_D1		LAB1P2_G2	N/A	4.06	
				165	Shuttle Crew Clothing [PLT]	1 Hlf	MPL2S3_D2		Middeck	N/A	12.74	
				166	Shuttle Crew Clothing [MS2]	1 Hlf	MPL2S3_D2		Middeck	N/A	13.38	
				167	Control Panel with Mounting Bracket TVIS Spare Bungee - 8 Series Bungee System Assembly - 2	1 Sngl	MPL2S3_D2		FGB_Port (near launched Treadmill)	N/A	26.84	
				168	LCVG (Krikalev) LCVG (Phillips)	1 Sngl	MPL2S3_D2		FGB Deck	N/A	17.10	
	☑	4		169	SAFER [S/N 1005]	1	MPL2S3_G1	STS A/L		1	89.47 Including Cushion	**Stage in STS A/L on FD04. Needed for EVA 1.** **Remove and stow switchguard in foam for returning SAFER.** Transfer on FD10 per POST EVA TRANSFER AND RECONFIG (FDF: EVA FS, Airlock Config)
				170	EVA TOOLS #2	1 Hlf	MPL2S3_G2		A/L1O1 (Rack Front)	BA-2	19.70	**See following line item for ops.
				170.1	3/8" Drive Ratchet	1	MPL2S3_G2 (inside item 170)	Middeck (in Tools Pregather CTB)		N/A	Part of Above	**Transfer before FD08 hatch close.** **Item needed for FD09 IVA Plug Demo.
				171	HRF ELECTRONIC MEDIA KIT	1	MPL2S3_G2		LAB1S2_G1	N/A	10.05	

[ ] - indicates note added by Transfer Team (not seen on actual label)
* in Stowage at Undock - if ESP-2 not installed on ISS
[ ] in Stowage Locations - indicates prior stowage locations

STS-114 / LF1 Resupply Transfer List

Chg Flag	☑	FD	Crew Initials	Item #	Item Name	Qty	Initial Stowage	Temp Stowage	Stowage at Undock	Tox Level	Wt (lbs)	PROCEDURES/**Constraints/** **Comments
			S4 RSR									
				182	APOLLO BAGS - 108	1 Zplk	MPL2S4_A1		MPL2S4_A1	N/A	15.20	**ONLY TRANSFER TO ISS IF CSCS.
				183	LEFT KBAR ASSEMBLY RIGHT KBAR ASSEMBLY	2	MPL2S4_A2		LAB1P4 (installed on HRF #2)	N/A	2.94	**Needed for HRF #2 rack installation on ISS. {HRF-2 RACK TRANSFER MPLM TO ISS} (SODF: ASSY OPS: TRANSFER: RACK OPS)
				184	PGT MUT End Effector Assembly	1 Sngl	MPL2S4_B1	STS A/L		BA-2	20.70	**Stage entire CTB in STS A/L on FD06 (label says transfer on FD04). Needed for EVA 2.**
				185	EVA TOOLS #1	1 Hlf	MPL2S4_B1		A/L1O1 (Rack Front)	N/A	11.45	
				186	Food Containers	8	MPL2S4_D1		FGB Deck	N/A	115.37	
				187	SLD - L	1	MPL2S4_D2		FGB Port	N/A	26.00	**Break apart SLD foam for return in this location.
				188	SLD - R	1	MPL2S4_D2		FGB Port	N/A	26.00	**Break apart SLD foam for return in this location.
				189	ELECTRONICS BOX ASSEMBLY	1	MPL2S4_D2		NOD1D4_K2	N/A	20.00	
				190	Shuttle Crew Clothing [MS5]	1 Hlf	MPL2S4_G1		Middeck	N/A	9.83	
				191	EMU BATTERY / ECOK / GLOVES	1 Sngl	MPL2S4_G1		FGB Deck	2	36.95	
				192	Food Containers	2	MPL2S4_G1		FGB Deck	N/A	28.72	
				193	Food Containers	8	MPL2S4_G2		FGB Deck	N/A	97.91	
X				194	BASEPLATE BALLAST ASSEMBLY - 4	4 [In Foam]	MPL2S4_K1		LAB1O4_A1 ~~See Swap List~~	N/A	26.82	**Use foam to transfer to ISS. **Return empty foam to MPL2F1_K1.** ~~**Reference Swap List for instructions.~~
				195	Triple CTB [Empty]	1	MPL2S4_K1		Near LAB window	N/A	6.20	

[ ] - indicates note added by Transfer Team (not seen on actual label)
* in Stowage at Undock - if ESP-2 not installed on ISS
[ ] in Stowage Locations - indicates prior stowage locations

STS-114 / LF1 Swap List

Chg Flag	☑	FD	Crew Initials	Item #	Item Name	Qty	Initial Stowage	Temp Stowage	Stowage at Undock	Tox Level	Wt (lbs)	PROCEDURES/**Constraints/** **Comments
			Swap List									
	☑	4		7	ALSP Drug Subpack [S/N 1002]	1	MA16N		LAB1D4_D1 (in ALSP)	1	7.94	**No items swapped between Subpacks. Stow new Subpack in location of returning Subpack. **Reference item 701 for completion of swap.
	☑	4		701	ALSP Drug Subpack [S/N 1001]	1	LAB1D4_D1 (in ALSP)		MA16N	1	7.94	**No items swapped between Subpacks. Stow new Subpack in location of returning Subpack.
X				~~194~~	~~BASEPLATE BALLAST ASSEMBLY - 4~~	~~4 [In Foam]~~	~~MPL2S4_K1~~		~~LAB1O4_A1~~	~~N/A~~	~~26.82~~	~~**Use foam to transfer to ISS. Stow returning unit in this foam for return.~~ ~~**Reference item 486 for completion of swap.~~
X				~~486~~	~~Return Item 486 [Baseplate Ballast Assembly]~~	~~1~~	~~LAB1P4_G (Returning ZSR)~~		~~MPL2F1_K1~~	~~N/A~~	~~6.00~~	~~**Stow this item in foam used for launched BBAs.~~
				115	BP/ECG KIT [S/N 1003]	1	MPL2A2_C1		LAB1O5_E2	0	26.50	**Retrieve unused Subpack Consumable Kits from returning BP/ECG kit and stow in this kit.** **Reference item 483 for completion of swap.
				483	Return Item 483 [BP/ECG KIT] [S/N 1001]	1	LAB1O5_E2		MPL2P2_B1	0	26.50	**Remove unused Subpack Consumables Kits from this kit and stow with launched BP/ECG.**
				5	DCS Battery Charger [S/N 1008]	1	[L10A1]	STS deployed	ISS deployed	N/A	0.5	**Swap on FD10 with old DCS Battery Charger (S/N 1002) deployed on ISS.** **Remove "114" yellow label before transferring to ISS.** **Reference item 702 for completion of swap.
				702	DCS Power Supply/Charger [S/N 1002]	1	ISS deployed		L10A1	N/A	0.47	**Swap on FD10 with DCS Battery Charger (S/N 1008) deployed on STS.**

[ ] - indicates note added by Transfer Team (not seen on actual label)
* in Stowage at Undock - indicates ESP-2 layer
[ ] in Stowage Locations - indicates prior stowage locations

STS-114 / LF1 Swap List

Chg Flag	☑	FD	Crew Initials	Item #	Item Name	Qty	Initial Stowage	Temp Stowage	Stowage at Undock	Tox Level	Wt (lbs)	PROCEDURES/**Constraints/** **Comments
				719.1	LiOH CARTRIDGE CANISTER [S/N 336]	1	NOD1P4_B2 (in CTB S/N 1009)		MPL2P3_K1 [in above CTB]	2	Part of above	**Swapped per item 179.1.
				719.2	LiOH CARTRIDGE CANISTER [S/N 334]	1	CM1PO_4_417_1		MPL2P3_K1 (in above CTB)	2	Part of above	**Swapped per item 179.2.
				124	OUTER HATCH WINDOW COVER ASSEMBLY	1	MPL2A4_C1		Node Nadir Hatch Window, EVA side	N/A	3.00	**Handle with care. Do not scratch or smudge window cover.** **Additional Velcro provided with new cover in the event that ground-installed Velcro does not completely align with Velcro on Node 1. Inform ground if this Velcro was used. **Photo new cover once installed. **Reference item 727 for completion of swap.
				727	OUTER HATCH WINDOW COVER ASSEMBLY	1	Node Nadir Hatch Window, EVA side		MPL2A4_C1	N/A	3.00	**Handle with care. Do not scratch or smudge window cover.** **Pack in materials used to launch new cover.
				114	ISS PHOTO TV RESUPPLY BAG	1 Sngl	MPL2A2_C1		LAB1O5_A2	BA 2	25.95	**No items swapped in this CTB. Stow launching Photo/TV Bag in location of returning Photo/TV bag. **Reference item 482 for completion of swap.
				482	Return Bag 482 [PHOTO/TV RESUPPLY]	1 Sngl	LAB1O5_A2		Ext A/L Floor	BA 2	46.50	**Gather the following photo/TV hardware and stow in this bag for return (items 482.1 - 482.5, 482b).**
				482.1	Camcorder Assembly [PD100] [S/N 1001, 1010, 1011, 1012]	4	ISS deployed		Ext A/L Floor (inside item 482)	BA 2	PART OF ABOVE	
				482.2	Digital Cassettes	10	ISS deployed		Ext A/L Floor (inside item 482)	N/A	PART OF ABOVE	
X				482.3	DCS 760 Camera Assemblies [S/N 1040, 1013 ~~1008, 1010, 1011~~]	2 ~~3~~	ISS deployed		Ext A/L Floor (inside item 482)	BA 2	PART OF ABOVE	

[ ] - indicates note added by Transfer Team (not seen on actual label)
* in Stowage at Undock - indicates ESP-2 layer
[ ] in Stowage Locations - indicates prior stowage locations

STS-114 / LF1 Return Transfer List

Chg Flag	☑	FD	Crew Initials	Item #	Item Name	Qty	Initial Stowage	Temp Stowage	Stowage at Undock	Tox Level	Wt (lbs)	PROCEDURES/**Constraints/** **Comments
X				706	Item moved to MPLM ~~SAFER~~ ~~[S/N 1003]~~	~~1~~	~~ISS A/L (in SAFER Stowage Bag)~~		~~Ext A/L Floor~~	~~1~~	~~72.10~~	~~**Remove SAFER from Stowage Bag and then transfer.**~~ ~~**Stow switchguard from launched SAFER on this returning SAFER Hand Controller. Stow Hand Controller deployed, inhibitor installed.**~~ ~~**Remove and trash old 'SAFER Checkout Results Cue Card'.**~~
				707	Starboard EMU [Krikalev] [S/N 3011]	1	ISS A/L		MD Ceil Stbd	BA-2	324.29	Transfer on FD10 per POST EVA TRANSFER AND RECONFIG (FDF: EVA FS, Airlock Config)
			Middeck Real-Time Additions									
				800	PCG-STES Hardware	1 Hlf	ISS		MF43K	N/A	8.89	Transfer per procedure {PCG-STES TRANSFER ISS TO MDDK} (SODF:ASSY OPS: Transfer: Powered) Gather the following PCG-STES hardware (items 800.1-800.3) and stow in half CTB retrieved from ISS. **Report CTB B/C to MCC-H**
				800.1	PCG-STES Muffler [96M12647-1]	1	LAB1P2_G1		MF43K (inside item 800)	0	5.8	Transfer per procedure {PCG-STES TRANSFER ISS TO MDDK} (SODF:ASSY OPS: Transfer: Powered)
				800.2	PCG-STES Power Adapter Cable [96M20602-1]	1	LAB1P2_G1		MF43K (inside item 800)	0	0.35	Transfer per procedure {PCG-STES TRANSFER ISS TO MDDK} (SODF:ASSY OPS: Transfer: Powered)
				800.3	PCG-STES RS422 Adapter Cable [96M20601-1]	1	LAB1P2_G1		MF43K (inside item 800)	0	0.24	Transfer per procedure {PCG-STES TRANSFER ISS TO MDDK} (SODF:ASSY OPS: Transfer: Powered)

[ ] - indicates note added by Transfer Team (not seen on actual label)
* in Stowage at Undock - indicates items that do not return if ESP-2 not installed on ISS
[ ] in Stowage Locations - indicates prior stowage locations

STS-114 / LF1 Return Transfer List

Chg Flag	☑	FD	Crew Initials	Item #	Item Name	Qty	Initial Stowage	Temp Stowage	Stowage at Undock	Tox Level	Wt (lbs)	PROCEDURES/**Constraints/** **Comments
			MPLM Return									
			Prepacked Bags/Items									
				400	Return Bag 400 [KURS Electronics Unit]	1 Trpl	FGB Deck		MPL2A1_K1	N/A	155.56	**Ensure ovals "eyes" are facing you when packing into the M-bag.
				401	Return Bag 401 [KURS Electronics Unit]	1 Trpl	FGB Deck		MPL2A2_H1	N/A	155.56	**Ensure ovals "eyes" are facing you when packing into the M-bag.
				402	Return Bag 402 [KURS Electronics Unit]	1 Trpl	FGB Deck		MPL2A3_H1	N/A	155.56	**Ensure ovals "eyes" are facing you when packing into the M-bag.
				404	Return Bag 404 [KURS Electronics Unit]	1 Trpl	FGB Deck		MPL2A4_K1	N/A	155.56	**Ensure ovals "eyes" are facing you when packing into the M-bag.
				405	Return Bag 405 [KURS Electronics Unit]	1 SH Gold Bag	FGB Deck		MPL2A4_H1	N/A	152.86	**Ensure ovals "eyes" are facing you when packing into the M-bag.
X				406	Return Bag 406 [KURS Amps #1]	1 Sngl	FGB Deck		MPL2F1_H1 ~~MPL2S3_K1~~	N/A	64.19	
				407	Return Bag 407 [KURS Amps #2]	1 Sngl	FGB Deck		MPL2P2_D2	N/A	58.61	
				411	Return Bag 411 [RPCM]	1 Hlf	LAB1P4_D1 (Returning ZSR)		MPL2S3_G2*	N/A	30.22	
				413	Return Bag 413 [CSLM Return Hardware]	1 Sngl	LAB1P2_J1		MPL2S4_K1	0	62.18	
				414	Return Bag 414 [EV ARM]	1 Hlf	LAB1P4 (Rack Front) (Returning ZSR)		MPL2P3_D2	4	14.10	
				415	Return Bag 415 [ISSI & PUFF]	1 Sngl	LAB1P4_E2/F2 (Returning ZSR)		MPL2A1_A1	BA-2	39.07	
				416	Return Bag 416 [HRF PUFF Experiment Supplies]	1 Sngl	LAB1P4_C1 (Returning ZSR)		MPL2F3_C1	0	21.27	

[ ] - indicates note added by Transfer Team (not seen on actual label)
* in Stowage at Undock - indicates items that do not return if ESP-2 not installed on ISS
[ ] in Stowage Locations - indicates prior stowage locations

STS-114 / LF1 Return Transfer List

Chg Flag	☑	FD	Crew Initials	Item #	Item Name	Qty	Initial Stowage	Temp Stowage	Stowage at Undock	Tox Level	Wt (lbs)	PROCEDURES/**Constraints/** **Comments
				458	Return Bag 458 [Chiao Crew Pref]	1 Sngl	LAB1P4_A2/D2 (Returning ZSR)		MPL2A2_K1	N/A	20.00	
				459	Return Bag 459 [Chiao Crew Pref]	1 Sngl	LAB1P4_A2/D2 (Returning ZSR)		MPL2A2_K1	N/A	20.00	
				460	Return Bag 460 [Sharipov Crew Pref]	1 Sngl	LAB1P4_A2/D2 (Returning ZSR)		MPL2A2_K1	N/A	20.00	
				461	Return Bag 461 [Sharipov Crew Pref]	1 Sngl	LAB1P4_A2/D2 (Returning ZSR)		MPL2A2_K1	N/A	20.00	
				462	Return Item 462 [Lu Return #1]	1 Sngl	LAB1D5		MPL2S4_D1*	N/A	20.00	
				463	Return Item 463 [Lu Return #2]	1 Sngl	LAB1D5		MPL2S3_D1*	N/A	20.00	
				464	Return Bag 464 [Malenchenko Return #1]	1 Sngl	LAB1D5		MPL2P3_D1*	N/A	20.00	
X				465	Return Bag 465 [Malenchenko Return #2]	1 Sngl	LAB1D5		MPL2S4_G2*	N/A	20.00	
				467	Return Item 467 [VOA OMI Kit]	1	LAB1O5_F1		MPL2S4_B1	BA-2	23.50	
				468	Return Item 468 [HRF LEMS Kit #2]	1	LAB1O1_G2		MPL2P2_D1*	0	14.55	
				469	Return Bag 469 [Water Bags]	1 Sngl	LAB1P1_D		MPL2P2_D1*	BA-2	22.32	

[ ] - indicates note added by Transfer Team (not seen on actual label)
* in Stowage at Undock - indicates items that do not return if ESP-2 not installed on ISS
[ ] in Stowage Locations - indicates prior stowage locations

STS-114 / LF1 Return Transfer List

Chg Flag	☑	FD	Crew Initials	Item #	Item Name	Qty	Initial Stowage	Temp Stowage	Stowage at Undock	Tox Level	Wt (lbs)	PROCEDURES/**Constraints/** **Comments
				480	Return Bag 480 [Water Bags]	1 Sngl	LAB1P4_A1/B1 (Rack Front) (Returning ZSR)		MPL2P2_D1*	0	13.60	**See following line item for ops.
				480b	PWR [S/N 1008]	1	LAB1P4 (inside item 480)		MPL2P2_D1* (inside item 480)	0	part of above	**PWR is vented per the Flight Plan. Ensure PWR is empty before stowing.**
				481	Return Bag 481 [CHeCS Return #1]	1 Sngl	LAB1P4_E1/F1 (Rack Front) (Returning ZSR)		MPL2P3_G1	BA-2	28.13	
				481f	CD CARRYING CASE	1	SM 2_229		MPL2P3_G1 (inside item 481)		part of above	
				483	Return Item 483 [BP/ECG]	1	See Swap List		MPL2P2_B1	0	26.50	**Reference Swap List for instructions.
				484	Return Bag 484 [EMU Gloves]	1 Hlf	LAB1P4_D2 (Returning ZSR)		MPL2S4_K2	N/A	27.40	
				485	Return Bag 485 [Subsa Hardware]	1 Sngl	LAB1S4_D2		MPL2S4_B2	0	29.45	
X				486	Return Item 486 [Baseplate Ballast Assembly]	1	LAB1P4_G (Returning ZSR) ~~See Swap List~~		MPLM Installed ~~MPL2F1_K1~~	N/A	6.00	**Installed in MPLM standoff per Flight Plan. ~~**Reference Swap List for instructions.~~
				487	Return Item 487 [Baseplate Ballast Assy]	1	LAB1P4_G (Returning ZSR)		MPLM Installed	N/A	6.00	**Installed in MPLM standoff per Flight Plan.
				488	Return Item 488 [LHA]	1	LAB1P4_G (Returning ZSR)		MPL2F3_C1	0	2.76	**Pack in HEPA filter foam that launched in this location.
				489	Return Item 489 [LHA]	1	LAB1P4_G (Returning ZSR)		MPL2F3_C1	0	2.76	**Pack in HEPA filter foam that launched in this location.

[ ] - indicates note added by Transfer Team (not seen on actual label)
* in Stowage at Undock - indicates items that do not return if ESP-2 not installed on ISS
[ ] in Stowage Locations - indicates prior stowage locations

STS-114 / LF1 Return Transfer List

Chg Flag	☑	FD	Crew Initials	Item #	Item Name	Qty	Initial Stowage	Temp Stowage	Stowage at Undock	Tox Level	Wt (lbs)	PROCEDURES/**Constraints/** **Comments
				490	Return Item 490 [LHA]	1	LAB1P4_G (Returning ZSR)		MPL2F3_C1	0	2.76	**Pack in HEPA filter foam that launched in this location.
				493	Return Bag 493 [CHeCS Return #2]	1 Sngl	LAB1P1_C1		MPL2F4_H1	1	33.20	
				496	Return Bag 496 [БСММ Array Matching Device Unit]	1 Hlf	FGB Wall		MPL2S3_K2	N/A	11.70	
				497	Return Bag 497 [KURS Electronics Unit]	1 Trpl	FGB Deck		MPL2F3_K1	N/A	155.56	**Ensure ovals "eyes" are facing you when packing into the M-bag.
				498	Return Bag 498 [IRED Can Aft]	1 Dbl	NOD1D4_G1		MPL2S3_K2	N/A	52.50	
				499	Return Bag 499 [IRED Can Fore]	1 Dbl	NOD1P1		MPL2P2_K1	N/A	52.50	
				501	Return Bag 501 [KURS Electronics Unit]	1 Trpl	FGB Deck		MPL2F1_K1	N/A	155.56	**Ensure ovals "eyes" are facing you when packing into the M-bag.
				504	Return Bag 504 [EVA Return Bag]	1 Sngl	LAB1P4 (Rack Front) (Returning ZSR)		MPL2P2_G2*	0	30.00	
X				505	Return Bag 505 [PGT/Hydrazine]	1 Sngl	LAB1P4 (Rack Front)		MPL2A1_C1 ~~MPL2A3_K1~~	BA-2	24.00	**Remove foam from RSP as required to stow CTB. Stow removed foam in any RSR location for return.
				507	Return Item 507 [11A EVA Return]	1 Sngl	LAB1P4 (Rack Front) (Returning ZSR)		MPL2S3_D2	N/A	22.32	
				508	Return Item 508 [Torque Wrench]	1	LAB1P4 (Returning ZSR)		MPL2S4_K1	N/A	4.00	
				513	Return Item 513 [INTERFACE UMBILICAL ASSEMBLY]	1	LAB1P1_D		MPL2F1_H1	N/A	26.00	

[ ] - indicates note added by Transfer Team (not seen on actual label)
* in Stowage at Undock - indicates items that do not return if ESP-2 not installed on ISS
[ ] in Stowage Locations - indicates prior stowage locations

STS-114 / LF1 Return Transfer List

Chg Flag	☑	FD	Crew Initials	Item #	Item Name	Qty	Initial Stowage	Temp Stowage	Stowage at Undock	Tox Level	Wt (lbs)	PROCEDURES/**Constraints/** **Comments
X				711	Bowersox RTH #2 [S/N 1286]	1 Sngl	LAB1P4_Aft (Returning ZSR)		MPL2P2_D2 ~~MPL2A3_K1~~	N/A	30.00	
				712	BU #1 [Budarin Crew Pref] [S/N 1123]	1 Sngl	LAB1P4_Aft (Returning ZSR)		MPL2F4_H1	N/A	30.00	
X				713	Bu-2 [Budarin Crew Pref] [S/N 1049]	1 Hlf	LAB1P4_Aft (Returning ZSR)		MPL2A1_K1 ~~MPL2A3_K1~~	N/A	20.00	
X				714	Empty Half CTBs	1 Hlf	LAB1P4_Aft (Returning ZSR)		MPL2F1_K1 ~~MPL2P3_D1*~~	N/A	6.60	**Retrieve three empty half CTBs from LAB1P4 aft (Returning ZSR). Pack two empty half CTBs into the third CTB for return.
X				715	Excess Integration	1 Sngl	ISS Staged		MPL2S4_G2*	N/A	40.00	**Pack following line items before stowing. **Retrieve single CTB from ISS. **Report CTB B/C to MCC-H**
X				715.1	ESP-2 Dust Covers	7	Brought in from EVA		MPL2S4_G2* (inside item 715)	N/A	Part of Above	**Comes in after EVA 1 and 3.
X				715.2	CMG Dust Covers	4	Brought in from EVA		MPL2S4_G2* (inside item 715)	N/A	Part of Above	**Comes in after EVA 2.
X				715.3	Trunion Covers	2	Brought in from EVA		MPL2S4_G2* (inside item 715)	N/A	Part of Above	**Comes in after EVA 1.
X				715.4	CMG/Z1 Shims	4	Brought in from EVA		MPL2S4_G2* (inside item 715)	N/A	Part of Above	**Comes in after EVA 2.
X				715.5	CMG/FSE Shims	4	Brought in from EVA		MPL2S4_G2* (inside item 715)	N/A	0.28	**Comes in after EVA 2.
				716	GPS Antenna	1 Sngl	Brought in from EVA		MPL2F3_H1	N/A	23.00	**Comes in STS A/L after EVA 1. **Pack returning GPS Antenna in single CTB used for launched antenna. **Reference item 118 for resupply item.

[ ] - indicates note added by Transfer Team (not seen on actual label)
* in Stowage at Undock - indicates items that do not return if ESP-2 not installed on ISS
[ ] in Stowage Locations - indicates prior stowage locations

STS-114 / LF1 Return Transfer List

Chg Flag	☑	FD	Crew Initials	Item #	Item Name	Qty	Initial Stowage	Temp Stowage	Stowage at Undock	Tox Level	Wt (lbs)	PROCEDURES/**Constraints/** **Comments
X				717	LiOH (1)	1 Hlf		Middeck (LiOH Box)	MPL2P3_D1* ~~MPL2A3_K1~~	2	11.50	**For Wendy and Charlie only. Reference LIOH CUE CARD
X				718	Item Deleted ~~LiOH (2)~~	~~1 Sngl~~		~~Middeck (LiOH Box)~~	~~MPL2A3_K1~~	~~2~~	~~22.63~~	~~**For Wendy and Charlie only.~~ ~~Reference LIOH CUE CARD~~
				719	LiOH (2) [S/N 336 and 334]	1 Sngl	See Swap List		MPL2P3_K1	2	22.63	**Reference Swap List for instructions.
				720	LiOH (2) [STS-111 65 and STS-111 59]	1 Sngl	NOD1D4_D2		MPL2F1_A1	2	22.63	**For Wendy and Charlie only. Reference LIOH CUE CARD **Expired and used canisters. **Retrieve single CTB (or two half CTBs) from ISS. **Report CTB B/C to MCC-H**
				721	LiOH (6)	1 Trpl		Middeck (LiOH Box)	MPL2P2_G1	2	65.00	**For Wendy and Charlie only. Reference LIOH CUE CARD. **Use triple CTB launched in MPLM for packing LiOH. Reference item 132.
				722	LiOH (6)	1 Trpl		Middeck (LiOH Box)	MPL2P3_K2	2	65.00	**For Wendy and Charlie only. Reference LIOH CUE CARD **Use triple CTB launched in MPLM for packing LiOH. Reference item 132.
				723	LiOH (6)	1 Trpl		Middeck (LiOH Box)	MPL2S4_G1	2	65.00	**For Wendy and Charlie only. Reference LIOH CUE CARD **Use triple CTB launched in MPLM for packing LiOH. Reference item 132.

[ ] - indicates note added by Transfer Team (not seen on actual label)
* in Stowage at Undock - indicates items that do not return if ESP-2 not installed on ISS
[ ] in Stowage Locations - indicates prior stowage locations

STS-114 / LF1 Return Transfer List

Chg Flag	☑	FD	Crew Initials	Item #	Item Name	Qty	Initial Stowage	Temp Stowage	Stowage at Undock	Tox Level	Wt (lbs)	PROCEDURES/**Constraints/** **Comments
				730	SAFER [S/N 1006]	1	ISS A/L (in SAFER Stowage Bag)		MPL2S3_G1	1	72.10	**Remove SAFER from Stowage Bag and then transfer. Stowage Bag remains in ISS A/L.** **Stow switchguard on Hand Controller. Stow Hand Controller deployed, inhibitor installed.** **Remove and trash old SAFER Checkout Results Cue Card.**
X				731	Safety Tethers [8] [S/N 1001, 1002, 1003, 1004, 1005, 1014, 1010, 1012]	1 Hlf	Brought in from EVA		MPL2S4_D1*	N/A	35.70	**Transfer after EVA 3.** ~~**Retrieve half CTB from LAB1P4 (Returning ZSR) aft stowage compartment.~~
				732	Silver Biocide Syringe Kit [S/N 1003]	1 Zplk	[MF43C]	Middeck	MPL2P2_A1	0	1.34	**Silver Biocide Syringe Kit used on Middeck. Stow after ops complete. Kit will be empty for return. **Reference item 28 for resupply item.
				733	Sox #1 [S/N 1001]	1 Sngl	LAB1P4_Aft (Returning ZSR)		MPL2P3_K1 ~~MPL2S3_K1~~	N/A	20.00	
				734	Zero G Stowage Rack [ZSR]	1	[LAB1P4]	MPLM empty bay	MPL2P3* (Attached on front of RSR)	N/A	69.51	**Do not mount ZSR for return until all prepack return items and CTBs have been removed from ZSR and all returning items in MPL2P3 rack have been stowed.** Mount ZSR on front of RSR per procedure: {1.105 LAB ZERO G STOWAGE RACK (ZSR) RETURN} (SODF: CSS: Crew Support Equipment) **Reference item 148 for ZSR/RSR Brackets.

[ ] - indicates note added by Transfer Team (not seen on actual label)
* in Stowage at Undock - indicates items that do not return if ESP-2 not installed on ISS
[ ] in Stowage Locations - indicates prior stowage locations

STS-114 / LF1 Return Transfer List

Chg Flag	☑	FD	Crew Initials	Item #	Item Name	Qty	Initial Stowage	Temp Stowage	Stowage at Undock	Tox Level	Wt (lbs)	PROCEDURES/**Constraints/** **Comments
			MPLM Real-Time Additions									
X				706	SAFER [S/N 1003]	1	ISS A/L (in SAFER Stowage Bag)		MPL2S3_K1 ~~Ext A/L Floor~~	1	72.10	**Remove SAFER from Stowage Bag and then transfer.** **Stow switchguard from launched SAFER on this returning SAFER Hand Controller. Stow Hand Controller deployed, inhibitor installed.** **Remove and trash old 'SAFER Checkout Results Cue Card'.** **Ref Safer Drawing in MSG 051 for correct orientation. Cut side piece of SAFER foam to fit in RSR. **Item moved from Middeck Return to MPLM Return.
X				801	EVA Large Trash Bag [S/N 1002]	1	Tool Pregather CTB		MPL2S3_D2	TBD	3.60	
X				804	Return Item 804 KURS Electronics Unit	1	FGB Deck		MPL2A3_K1	N/A	149.91	**S/N of returning KURS to be provided by MCC-M. **Use triple CTB launched in MPLM for packing KURS. Reference item #163.
X				805	Respiratory Support Pack (RSP) [S/N 1004]	1	LAB1D4_D1		MPL2S4_D1*	TBD	9.8	**Do not stow unil RSP ops complete per timeline.**
X				806	HEPA Filter	3	ISS Installed		MPL2S4_K1	0	4.47	**Do not stow unil R&R'd per timeline.**

[ ] - indicates note added by Transfer Team (not seen on actual label)
* in Stowage at Undock - indicates items that do not return if ESP-2 not installed on ISS
[ ] in Stowage Locations - indicates prior stowage locations

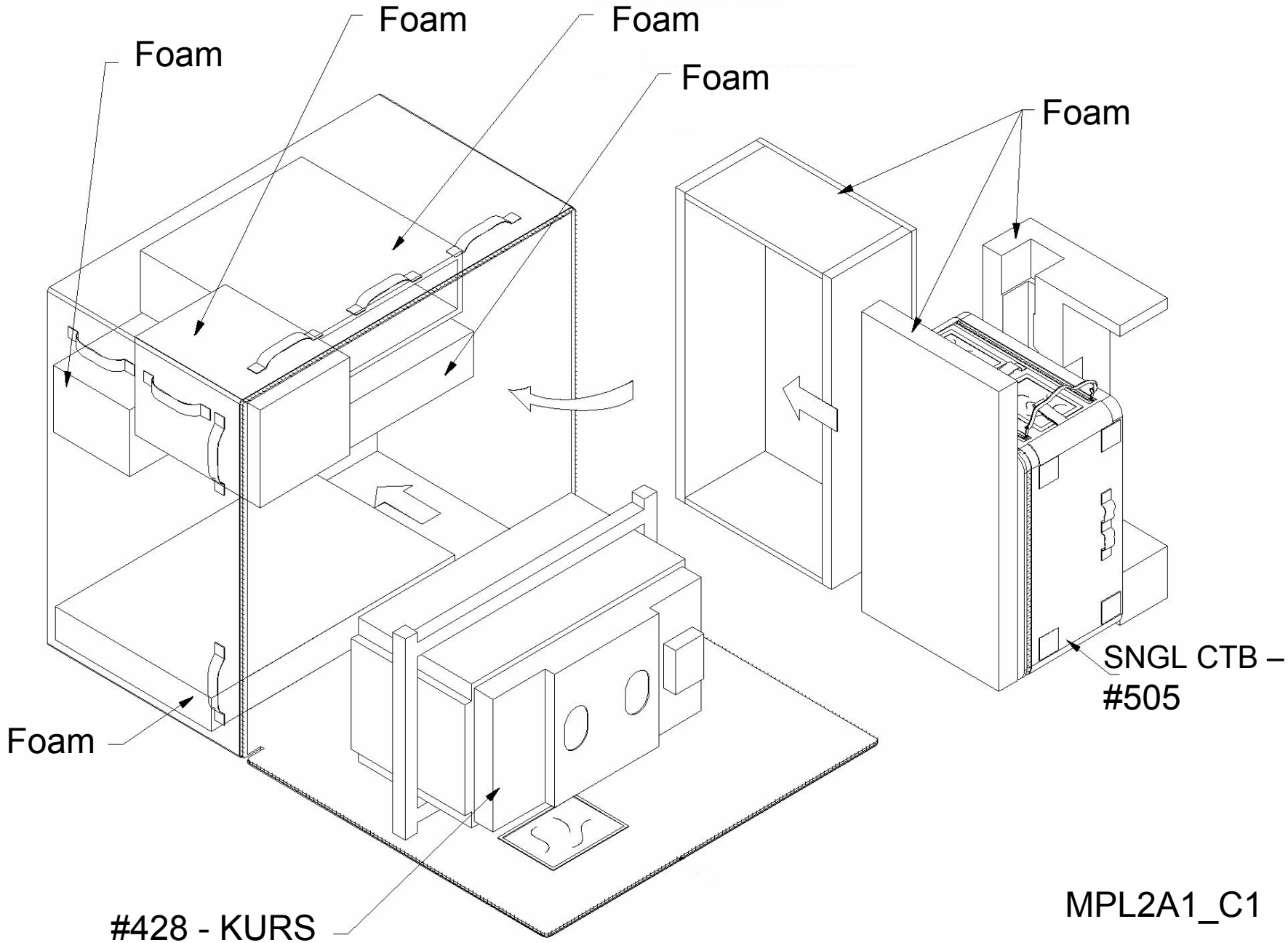

Return Layout 13

SIZE	CAGE CODE	DWG NO	REV
C	21356	SEG32108492	E
SCALE N/A	ORG OC	FMT P02MAY04	SHEET 3 OF 3

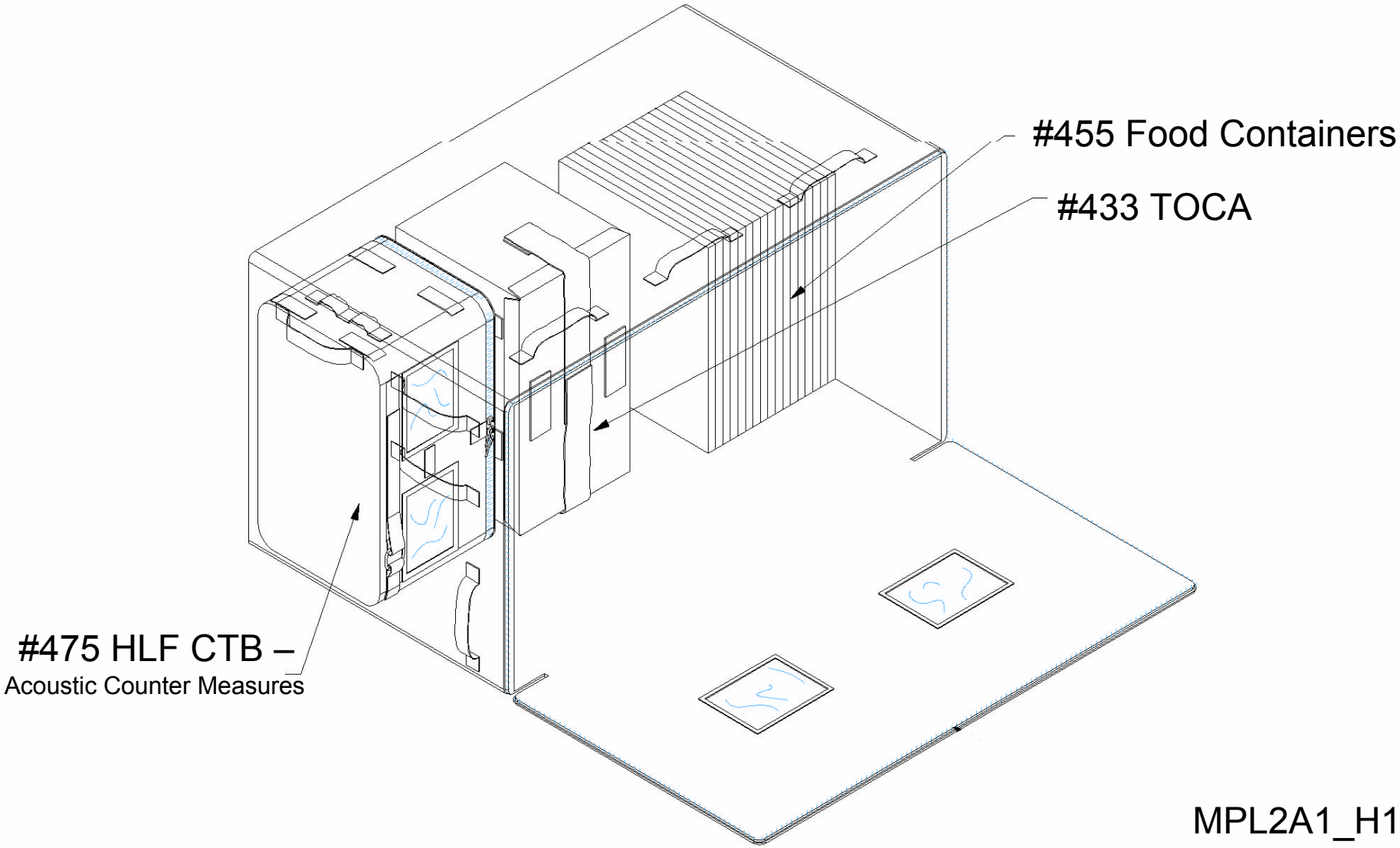

Return Layout 14

SIZE	CAGE CODE	DWG NO	REV
C	21356	SEG32108644	B
SCALE N/A	ORG OC	FNT P02MAY04	SHEET 2 OF 2

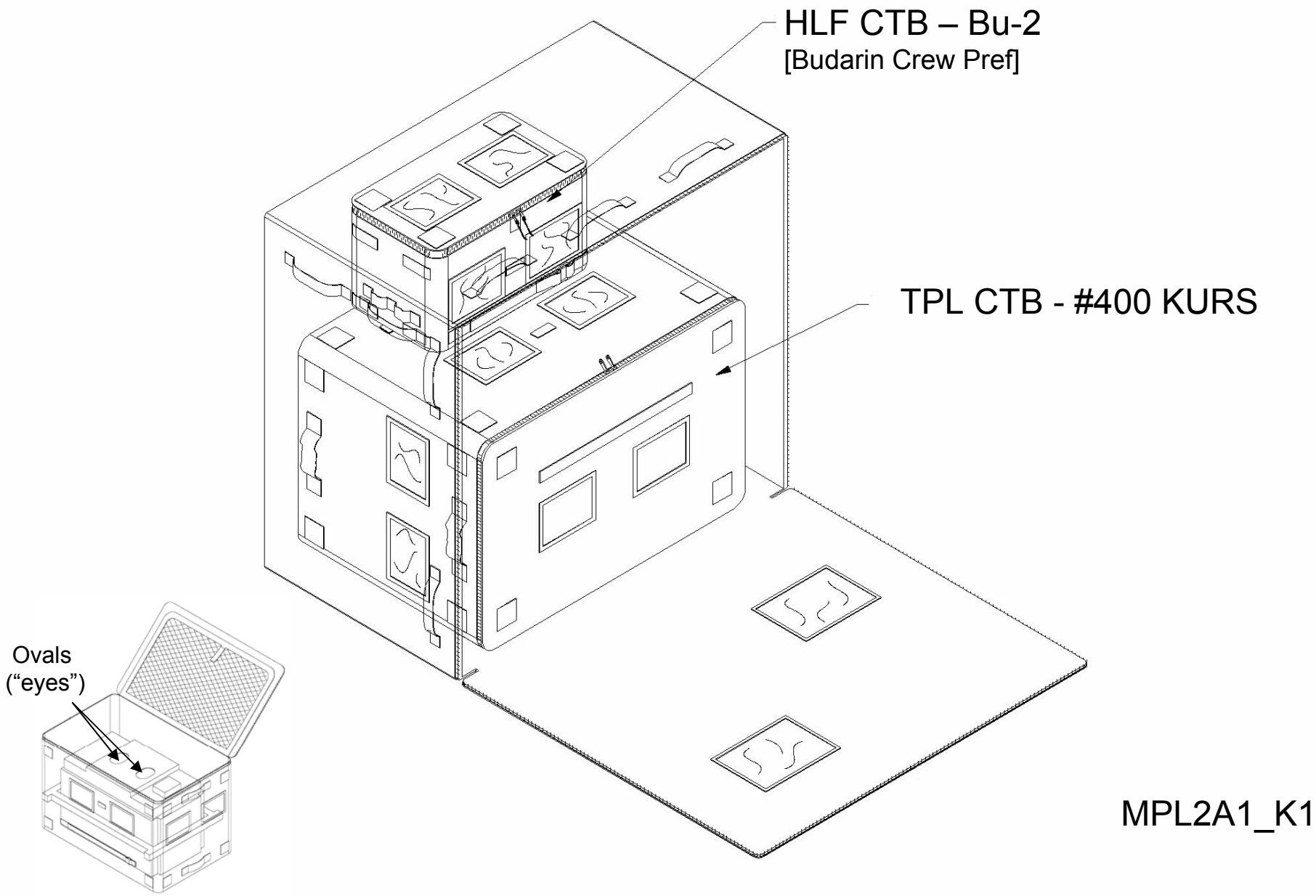

Return Layout 15

SIZE	CAGE CODE	DWG NO	REV
C	21356	SEG32108645	B
SCALE N/A	ORG OC	FMT P02MAY04	SHEET 2 OF 3

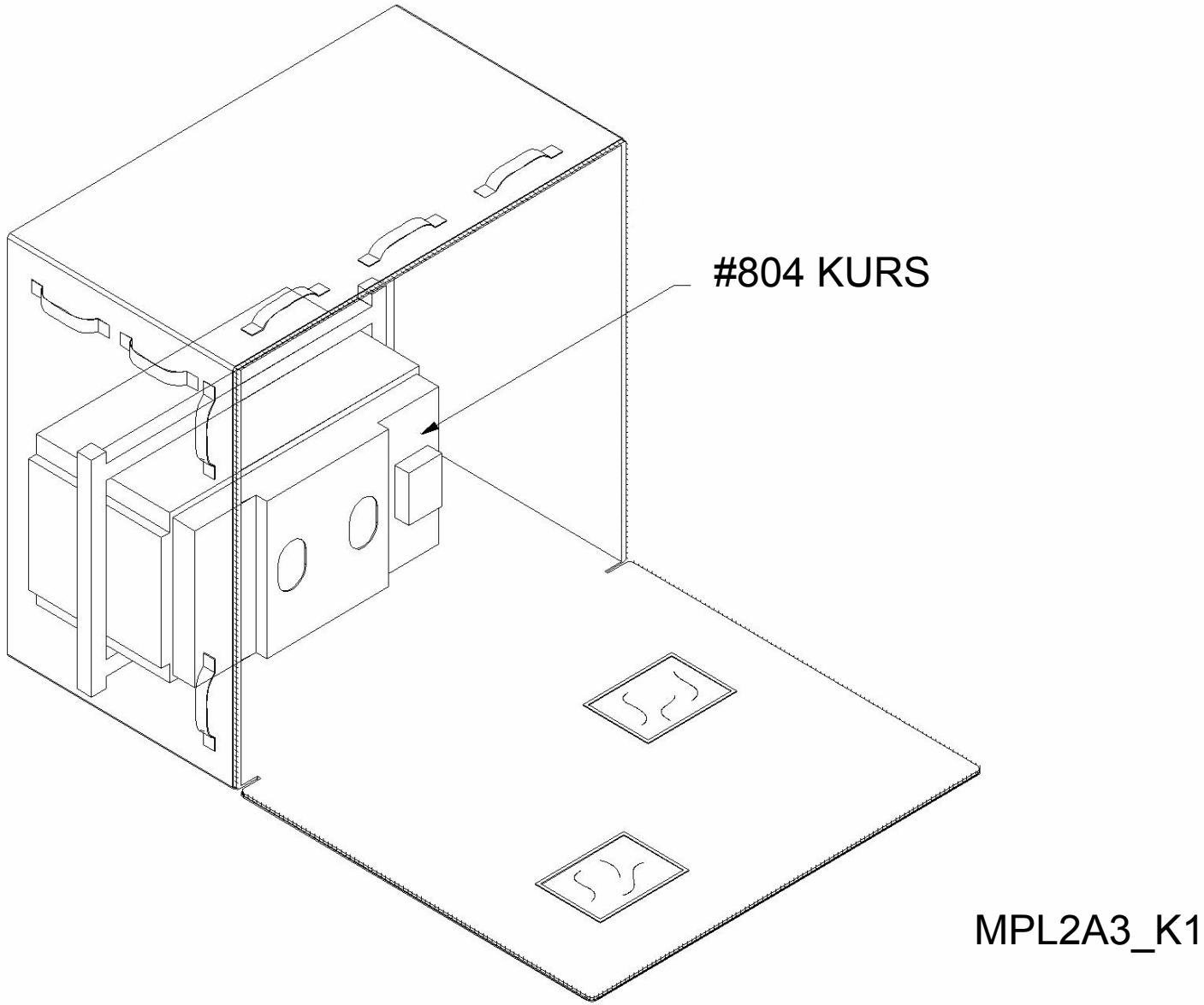

Return Layout 25

SIZE	CAGE CODE	DWG NO	REV
C	21356	SEG32108651	A
SCALE N/A	DRB OC	DWT R02MAY04	SHEET 2 OF 2

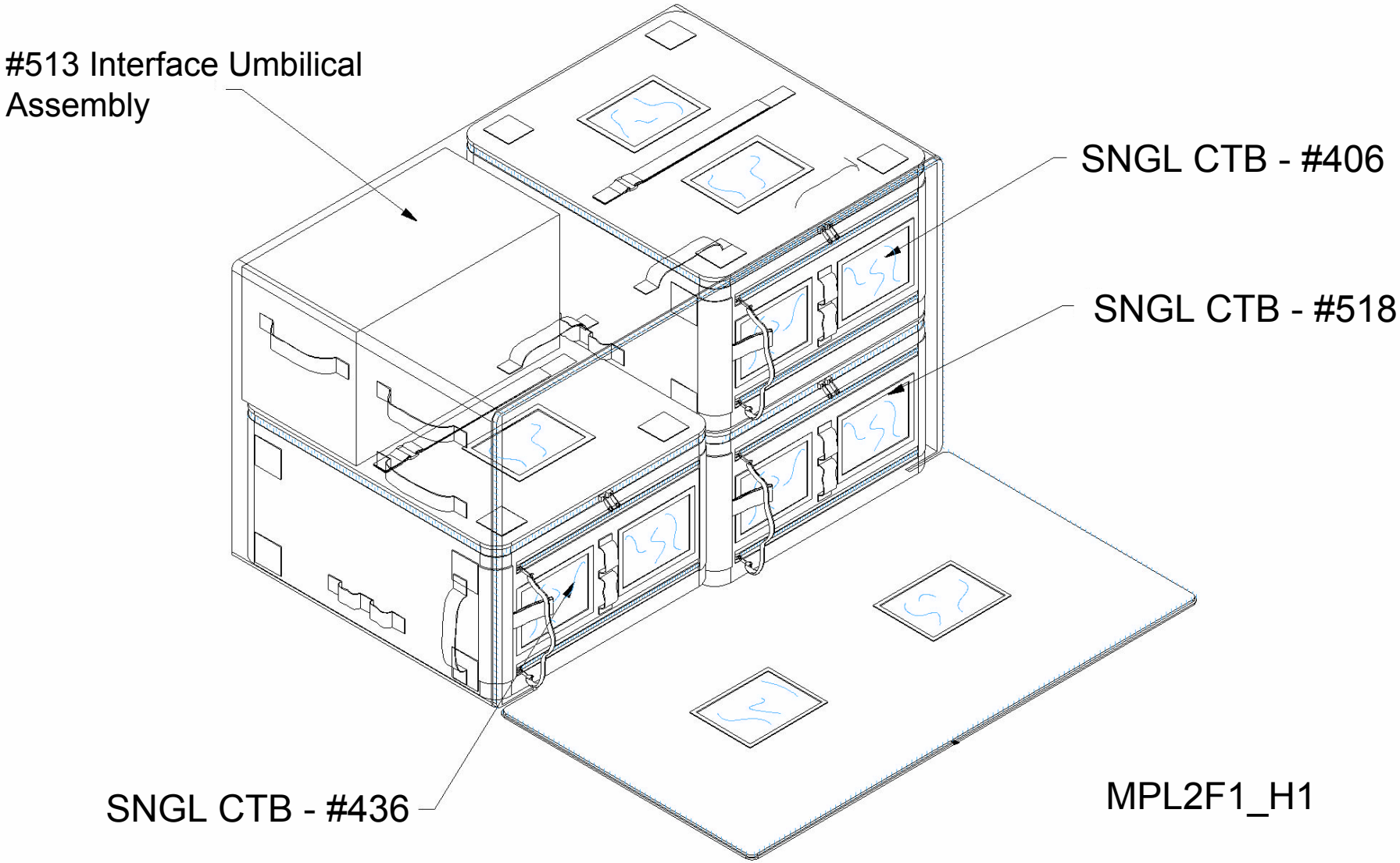

Return Layout 33

SIZE	CAGE CODE	DWG NO	REV
C	21356	SEG32108656	A
SCALE N/A	ORG OC	FNT P02MAY04	SHEET 2 OF 2

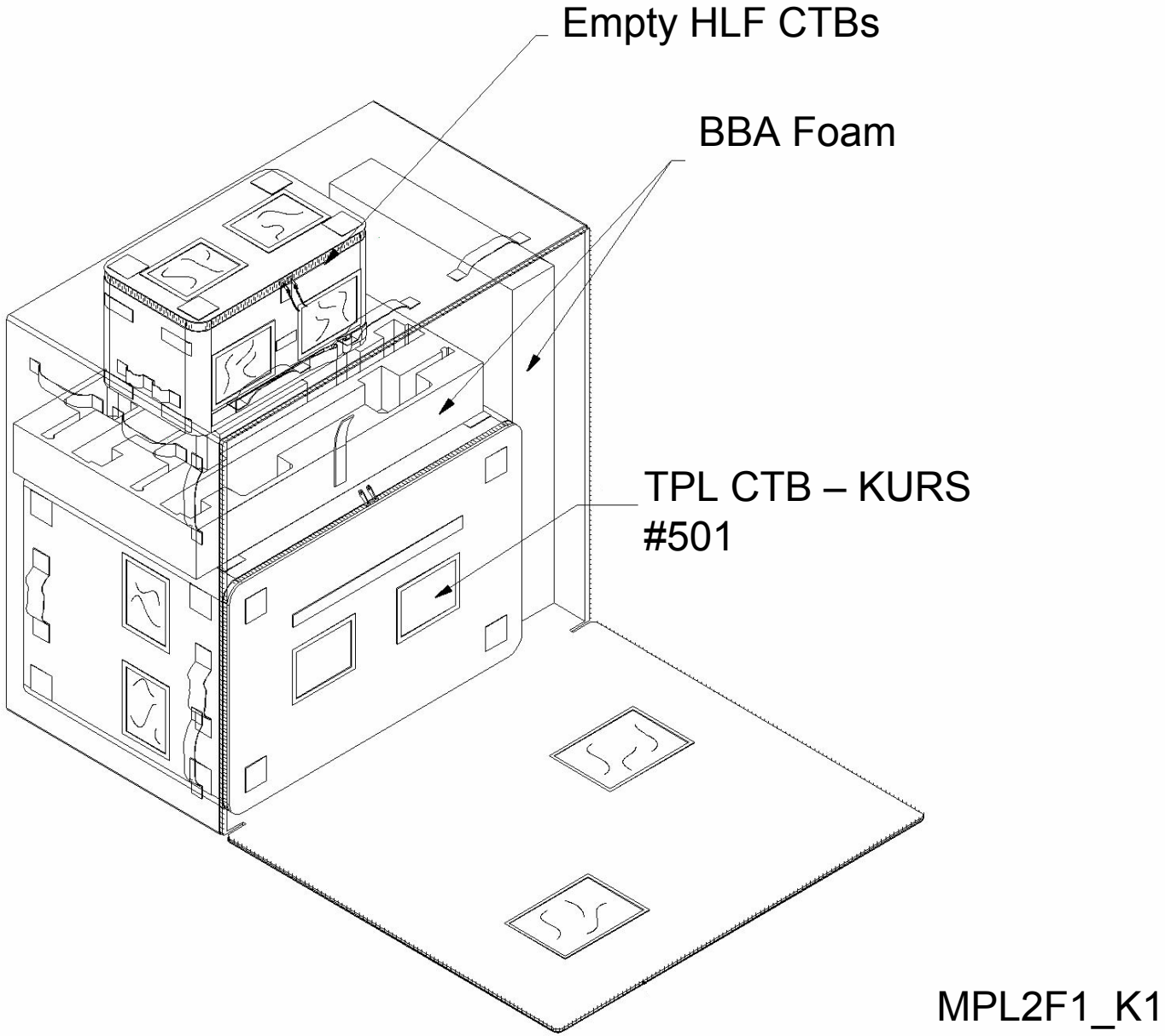

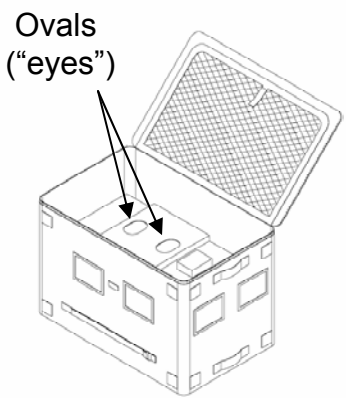

Return Layout 34

SIZE	CAGE CODE	DWG NO	REV
C	21356	SEG32108657	A
SCALE N/A	DPE OC	FMT P02MAY04	SHEET 2 OF 3

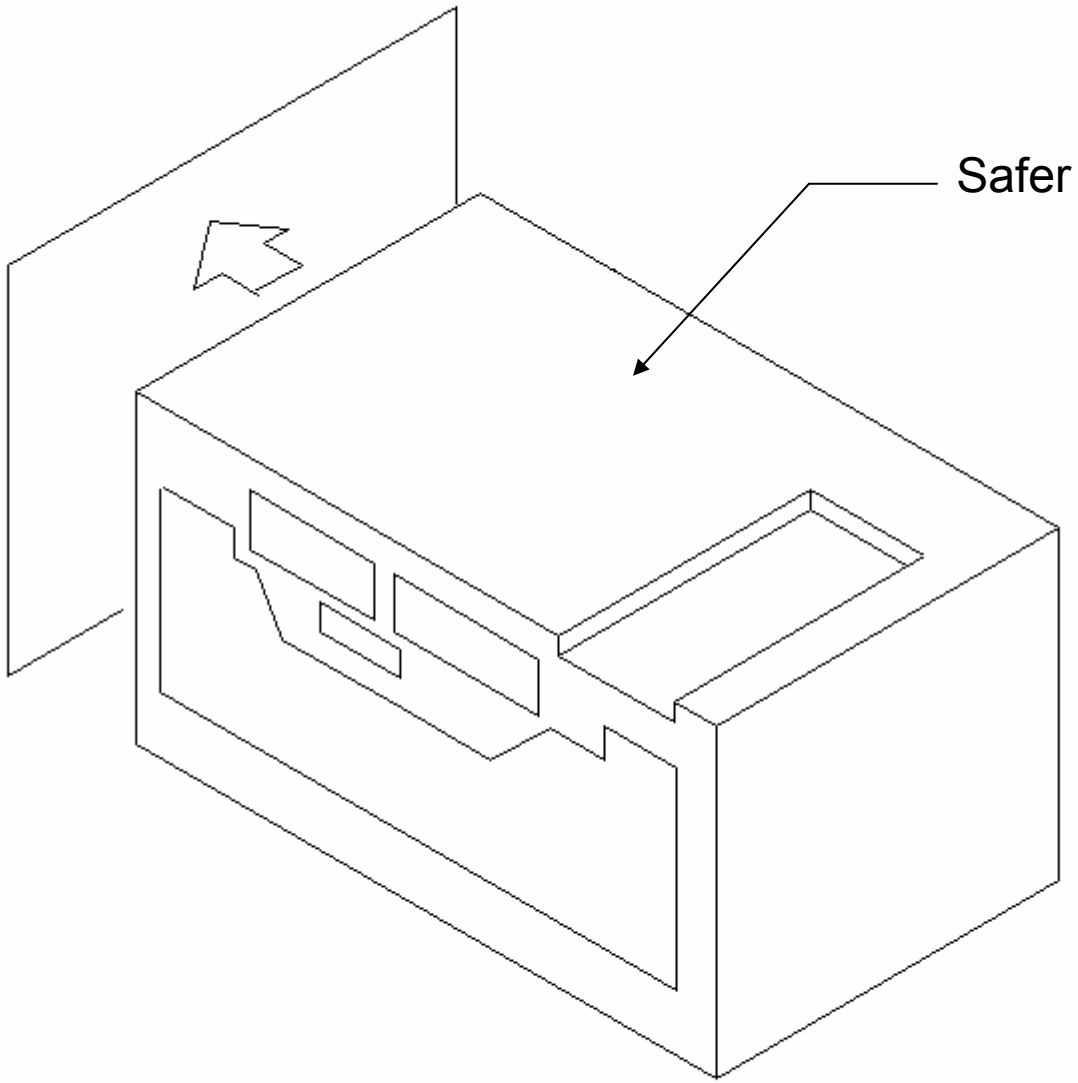

MPL2S3_K1

ORIENTATION OF SAFER IN RSR LOCATION

Water Activity Summary:

Today the following will be dumped sequentially via the waste dump line: the waste water tank, 4 PWRs and one or two Condensate CWCs. The Shuttle Condensate CWC will be changed out. There will be one Supply H2O CWC fill for transfer to ISS.

Waste, PWR and Condensate CWC Dumping Details:

Prior to performing the waste dump, scheduled at 4/16:00, pregather the following:

PWR S/N 1005 from ISS A/L1D1_A1
PWR S/N 1008 from ISS LAB1P4 Rack Front in Return Bag #480
PWR S/N 1011 from ISS A/L1D1_A2
PWR S/N 1012 from ISS A/L1D1_B1

ISS Condensate CWC S/N 1027 from ISS NOD1P2 in M-02 bag

PWR venting hardware (B-B hose, R-Y QD adapter) from ISS LAB1S5_C1

Waste Water Dump (WWD) Filter from the Shuttle BOB (MF14H)

CWC hose (20 ft.) from Shuttle CHCK.

One empty CWC to be used for Shuttle Condensate - Select one of the following s/n: 5050, 5057, 5082, 5092, 5101, 5104, 5105 from MPLM MPL2P2_A1 and report s/n to MCC.

For the waste tank dump, perform Steps E, G, and I of SUPPLY/WASTE WATER DUMP (ORB OPS, ECLS), p. 5-2. Dump waste tank to 5%, dump duration will be approx. 22 minutes. MCC will TMBU all s/w limits.

While waste tank is dumping, perform CHANGEOUT of SHUTTLE CONDENSATE COLLECTION (ORB OPS, ECLS) p. 5-36.

Upon completion of Step I #2 of SUPPLY/WASTE WATER DUMP, exit that procedure and proceed to the ML31C action in Step 1 of PWR DUMP - WASTE LINE (ORB OPS, ECLS) p. 5-37. Steps 2 and 3 are not required. Continue to Step 4 and dump the 4 PWRs listed above sequentially. Each PWR dump should take no more than 8 minutes each.

Upon completion of “When PWR empty” steps in Step 5 DUMP TERMINATION of PWR DUMP-WASTE LINE, exit that procedure and proceed to Step A DUMP PREP of CWC OVERBOARD DUMP (ORB OPS, ECLS) p. 5-32 and dump the ISS Condensate CWC s/n 1027. Steps B, C and H are not required. After dumping ISS Condensate CWC s/n 1027, check with MCC. If time remains, we will dump as much of Shuttle Condensate CWC s/n 6008 as possible. Dump time for each Condensate CWC will be approx. 45 minutes.

Post dumping procedures, the items should be stowed as follows:

PWRs s/n 1005, 1011 and 1012 will be temp stowed for filling on FDs 8 & 9
PWR s/n 1008 in MPLM MPL2P2_D1, Return Bag #480

ISS PWR venting hardware (B-B hose and R-Y QD adapter) into the Ziploc Bag and return it to the ISS LAB1S5_C1

ISS Condensate CWC s/n 1027 in ISS NOD1P2

Shuttle Condensate CWC s/n 6008 in MF43E or MF43G (if completely empty) Temp stow if not emptied.

For all three dumping procedures, MCC will TMBU the FDA.

CWC Fill Details:

There is one CWC fill scheduled for today. Retrieve one CWC located at ISS MPL2P2_B1 or MPL2P2_D2 from among those with the following S/Ns: 1052, 1055, 1056, 1057, 1058, 1060, 1061, 1063, 1067. (Note that some of these bags already have cracks at their fittings, but they have passed preflight pressure decay testing.) Perform this fill at 4/21:30 using CWC FILL in SHUTTLE/ISS H2O CONTAINER FILL (ORB OPS,ECLS), p. 5–26, and expect the fill to last about 56 minutes. The additives are both minerals and Silver biocide, and a sample is required. This sample should be stored in MF43E.

Following the fill, the CWC should be transferred to ISS. Squeeze the CWC and inspect the outer canvas cover and all fittings for cracks and leaks; report the bag's condition to MCC along with its S/N, Barcode, and stowage location.

The following summarizes the FD5 MMT decisions and forward work.

The team has decided that we can add a docked day to the nominal flight plan, between FD9 and FD10. We are determining the activities to be accomplished in that extra day, but you can expect that we'll ask you to use some of the time for transfer activities. The team will be defining that plan over the next day or so, but for now you can plan to be docked for one additional day! Thanks for the hard work on the power conservation - we would not have gotten the extra day without it!

As of today's MMT the TPS team has cleared all of the TPS tile for entry. They have given a verbal clearance of the RCC and we expect to get that formally in the FD6 MMT. The other damage sites have also been cleared, including the blanket near W1. So, while we're going to wait to give the formal final clearance of all TPS for entry, we're certainly moving in that direction and should be there in a day or two.

As you know there are 2 protruding gap fillers in the nose tiles, one on the port side and one on the starboard side in the chine area. Both of those gap fillers are now believed to be of the AMES gap filler type, whereas we previously thought one of them was a ceramic gap filler. The aero/thermal, entry flight control and TPS teams are working hard to assess the possibility of these gap fillers causing an early boundary layer (BL) transition, and the resulting heating effects, as well as the possibility of having asymmetric boundary layer transition (ABLT). As you know we have experienced early BL transition on a number of previous missions, some of them known to have been caused by gap filler protrusion and others where we could never prove it definitively. We've also experienced ABLT on several missions.

At any rate, since we have 2 protruding gap fillers and there is a good chance of having early BL transition and/or ABLT, the team is assessing the effects to ensure that we maintain the necessary margin for heating, as well as for the Aerojet DAP. The current conventional wisdom in the entry flight control community is that the DAP can handle the ABLT quite well, and we don't expect to increase the Aft RCS redline for entry. You may recall that the WRAP DAP was actually designed with ABLT in mind and on previous WRAP DAP missions to date where we've had ABLT the resulting worst case prop usage was ~ 500 lb compared to the normal 300-400 lbs usage. We expect the results of these teams to come forward to the FD7 MMT on Monday, and we'll forward those along as they are available. While there is a strong overall sense that the system (TPS and flight control) can handle these gap fillers during your entry without using undue margin, we want to be vigilant and look at it closely to make sure we know what to expect.

At the same time, there is a proactive effort underway to define a potential EVA task for you to remove, trim, or re-insert these gap fillers. We think you can get to the port one with the Shuttle RMS, and we'd likely look at using the station RMS for the starboard one. We're off looking at what the task would be, including EVA crew member access, EVA timeline etc. At this time we want to stress that this is being looked at as a precaution only in the event we are not comfortable leaving the gap fillers protruding for entry. We expect to have at least a preliminary decision on whether or not we are good to fly as is in the FD7 MMT on Monday, and we will continue to keep you appraised.