# STS-114/LF1

## *FD 09 Execute Package*

| MSG | Page(s) | Title |
|---|---|---|
| 103C | 1 - 15 | FD09 Flight Plan Revision **(pdf)** |
| 104A | 16 - 17 | FD09 Mission Summary **(pdf)** |
| 102 | 18 | EVA 3 Gap Filler Tool Config Pictures **(pdf)** |
| 105 | 19 - 21 | EVA 3 Pen and Inks to MSG100(11-0706) and 101(11-0707) |
| 106 | 22 | FD09 Water Activity Summary **(pdf)** |
| 107 | 23 - 31 | Revised OBSS Tile Board Survey Procedure **(pdf)** |
| 108 | 32 - 35 | FD09 Transfer Message **(pdf)** |
| 109A | 36 | Deltas to Pre and Post EVA procedures for EVA 3 **(pdf)** |
| 110 | 37 | EVA 3 Hacksaw Blade Bend Angle **(pdf)** |
| 111 | 38 | FD08 MMT Summary **(pdf)** |
| 112 | 39 | FD 9 Robotics Procedure Overview **(pdf)** |

***Approved by FAO:*** *L. DeLapp*
***OPS Plan:*** *J. Aldape*

*Last Updated: Aug 3 2005 2:38AM GMT*
***JEDI*** *(**J**oint **E**xecute package **D**evelopment and **I**ntegration), v2.04.0003*

MSG INDEX


| MSG NO. | TITLE |
|---|---|
| 102 | EVA 3 Gap Filler Tool Config Pictures - (11-0709) |
| 103 | FD09 Flight Plan Revision |
| 104 | FD09 Mission Summary - (11-0710) |
| 105 | EVA 3 Pen and Inks to MSG100(11-0706) and 101(11-0707) - (11-0711) |
| 106 | FD09 Water Activity Summary |
| 107 | Revised OBSS Tile Board Survey Procedure |
| 108 | FD09 Transfer Message - (11-0713) |
| 109 | Deltas to Pre and Post EVA Procedures for EVA 3 - (11-0714) |
| 110 | EVA 3 Hacksaw Blade Bend Angle |
| 111 | FD08 MMT Summary |
| 112 | FD 9 Robotics Procedure Overview – (11-0718) |


1. Post-Sleep Cryo Config

   R1 CRYO O2, H2 MANF VLV TK1 (two) - OP (tb - OP)
   O2 TK3 HTRS A, B (two) - OFF

   A11 CRYO TK4 HTR O2 A – AUTO

2. Current cryo margins are ~3 hrs O2 limited. You continue to do a great job conserving cryo! We really appreciate all your efforts.

   We would like to try to put a little more O2 in the bank, so as a reminder, if you could please minimize lighting, PGSC, IDP, MDU, and galley fan use whenever possible that would be a big help.

   Also, for the EVA, if the Payload Bay Floodlights are not required, please minimize their use. Remember, the minimum ON time is 10 minutes.

3. FD09 Exercise Constraints:

   No exercise allowed while ESP-2 is being maneuvered to install position (clearance < 2 ft) starting at MET 7/18:25 until the capture claw is reopened following hard capture.

4. Due to the failure of the Outer Hatch Starboard Equalization Valve, make the following change to Step 6 in ISS EGRESS FOR SHUTTLE EVA (EVA, REPRESS\DEPRESS) p. FS 6-6:

   From: ODS 6. Outer Hatch Equal vlv cap (two) - removed

   To: ODS 6. Port Outer Hatch Equal vlv cap (one) - removed

5. REPLACE PAGES 2-18A THROUGH 2-19B AND 3-92 THROUGH 3-101.

08/02/05 21:22:50 **REPLANNED**

GMT 08/03/05 (215) 03 04 05 06 07 08 09 10 11 12 13 14

MET Day 007 12 13 14 15 16 17 18 19 20 21 22 23 008/00

**STS-114**

| | | |
|---|---|---|
| CDR COLLINS | SLEEP | **FD09** POST SLEEP; OIU*; PMC A/G; 10.2*; POST SLEEP; ILLUM OFF; CWC INIT 13; EVA3 INHBT; CWC TERM; DAP13; ATTHO*; N2TERM; 14.7 REPR; DAP12; XFER CWC 1; MEAL; EVA3 INHBT; DAP13; ISS EGRS |
| PLT KELLY | SLEEP | SALIVA; POST SLEEP; EXERCISE; OBSS SURVEY; ATTHO*; ISS INGRS; RWS; ESP2; OBSS SURVEY; ESP2 UNGRPL; MNVR MBS PRE GRPL; MBS GRPL; OBSS SURVEY; LAB UNGRP; SSRMS S/U; GAP FILLER SUPPORT; OBSS |
| MS1 NOGUCHI | SLEEP | POST SLEEP - GIRA; PROC REVW; EVA PREP; EMU PURGE P/B; DEPRS; EGRS/ SETUP; ESP2 INSTALL; MISSE 5 INSTALL; RJMC REMOVAL; **EVA 3 (7:00)**; SSRMS S/U; COMM & ISS TASKS; CLNUP/ INGR |
| MS2 ROBINSON | SLEEP | POST SLEEP; PROC REVW; EVA PREP; EMU PURGE P/B; DEPRS; EGRS/ SETUP; ESP2 INSTALL; FRGF RMVL; GAP FILL TOOL PREP; SSRMS S/U; GAP FILLER RMVL 1(2); CLNUP/ INGR |
| MS3 THOMAS | SLEEP | POST SLEEP; PROC REVW; EVA PREP; EMU PURGE P/B; DEPRS; IVA SUPPORT |
| MS4 LAWRENCE | SLEEP | SALIVA; LOG; POST SLEEP; EVA PREP; XFER REVIEW; P/TV07 EVA S/U; EXERCISE; ISS INGRS; RWS; SSRMS ESP2 INSTALL; ESP2 UNGRPL; MNVR MBS PRE GRPL; MBS GRAPPLE; LAB UNGRP; SSRMS S/U; GAP FILLER SUPPORT; ISS EGRS |
| MS5 CAMARDA | SLEEP | SALIVA; LOG; POST SLEEP; 10.2*; POST SLEEP; EXERCISE; XFER REVIEW; OBSS SURVEY; 14.7 REPR; OBSS SURVEY; TRANSFER; OBSS SURVEY; MEAL; TRANSFER; OBSS |

**ISS**

| | | |
|---|---|---|
| ISS CDR KRIKALEV | SLEEP | POSTSLEEP-ISS; PREP WORK; DPC; COX; ♣; XFER REVIEW; TVIS; TRANSFER; MIDDAY-MEAL; TRANSFER; VELO + HC |
| FE-1 PHILLIPS | SLEEP | POST SLEEP; PREP WORK; DPC; BSA-T; ⊕; ♦; EXERCISE CEVIS; EXERCISE RED; TRANSFER; MIDDAY-MEAL; TRANSFER |

DAY/NIGHT

ORBIT 119 120 121 122 123 124 125 126 127

TDRS E -46.0 W -171.0 Z -275.0

ORB ATT BIAS -XLV -ZVV

NOTES

*ACT*10.2 MAINT ♣COГC-AOK-ГAHK-ANLZ *STS TO CMG

⊕EVA-EQUIP-LOCK-CNFG *CMG TO STS

2-18A♦HMS-RSP-C/O

FLT PLN/114/FLIGHT

# ISS-11 SHORT TERM PLAN PAYLOAD PAGE

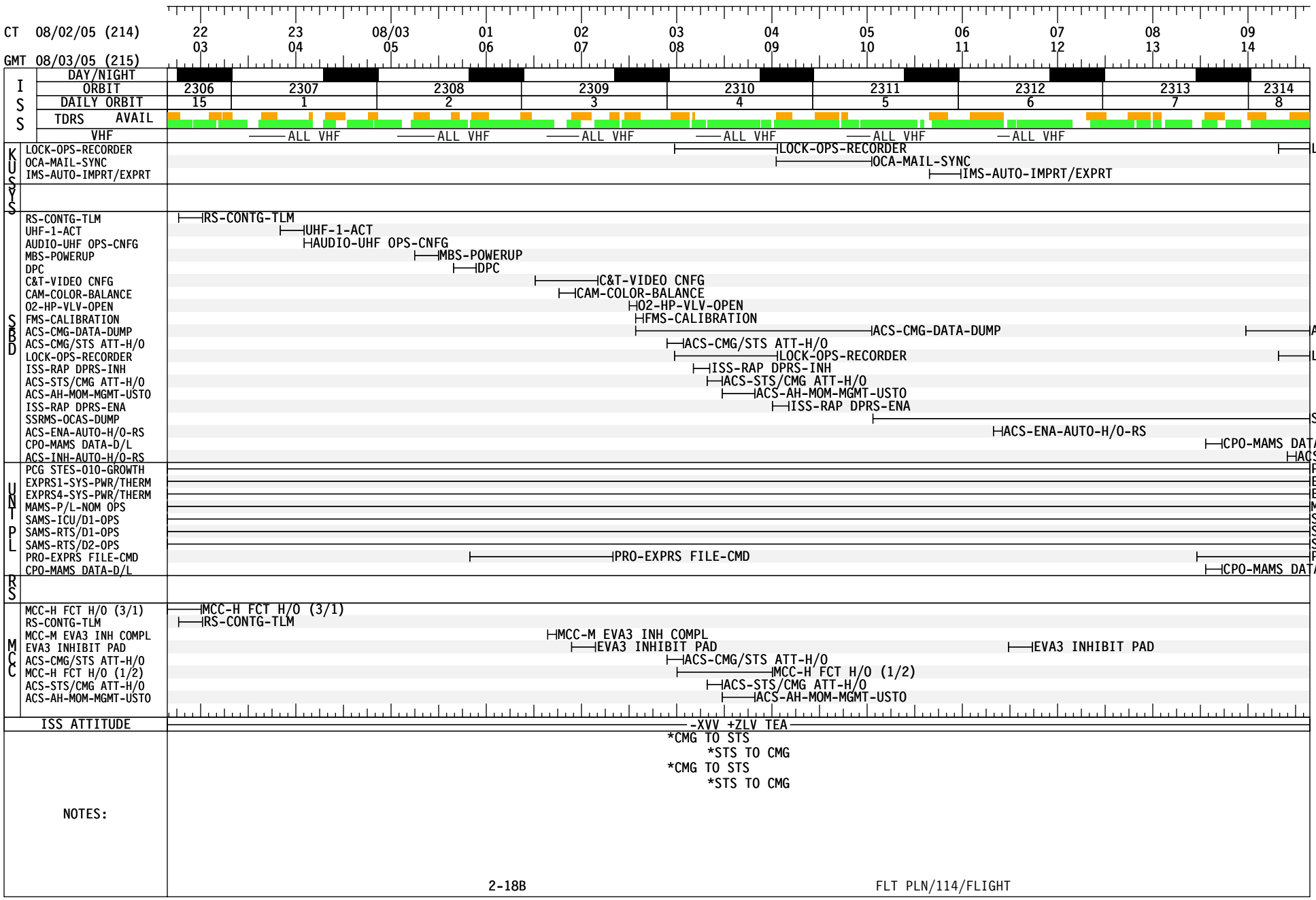

08/02/05 21:22:50 **REPLANNED**

GMT 08/03/05 (215) FD9 — MET Day 008

15 16 17 18 19 20 21 22 23 08/04 01 02 — 008/00 01 02 03 04 05 06 07 08 09 10 11 12

| | | |
|---|---|---|
| STS-114 | CDR COLLINS | ATTHO*; WVSPD; ATTHO*; DAP12; EXERCISE; ILLUM ON; PRE SLEEP; PMC A/G; PRE SLEEP; ISS EXTERNAL SURVEY; SLEEP |
| STS-114 | PLT KELLY | WCS; INGRS; POST; LAB GRAPL; OIU*; PRE SLEEP; SLEEP |
| STS-114 | MS1 NOGUCHI | CLNUP/INGR; RPRS; POST EVA W/H2O; PRE SLEEP - GIRA; SLEEP |
| STS-114 | MS2 ROBINSON | CLNUP/INGR; RPRS; POST EVA W/H2O; TETHER REBA-I; PRE SLEEP; SLEEP |
| STS-114 | MS3 THOMAS | IVA SUPPORT; RPRS; POST EVA W/H2O; PRE SLEEP; SLEEP |
| STS-114 | MS4 LAWRENCE | INGRS; POST; LAB GRAPL; PRE SLEEP; XFER; TAGUP; XFER; CALL; PRE SLEEP; SLEEP |
| STS-114 | MS5 CAMARDA | PWR FILL; DCS DIS ASSY; PRE SLEEP; SLEEP |
| ISS | ISS CDR KRIKALEV | TRANSFER; DAILY PLN RVW; PREP WORK; ♣; DPC; XFER; TAGUP; PRESLEEP-ISS; SLEEP |
| ISS | FE-1 PHILLIPS | CREW LOCK; BACTERIA FLTR R&R; DAILY PLN RVW; PREP WORK; ⊕; DPC; PRESLEEP-ISS; SLEEP |

DAY/NIGHT

ORBIT: 127 128 129 130 131 132 133 134 135

TDRS: E -46.0 / W -171.0 / Z -275.0

ORB ATT: BIAS -XLV -ZVV

NOTES:
*STS TO CMG
*CMG TO STS
*DEACT
♣PRESLEEP-ISS
⊕EVA-EQUIP-LOCK-DCNFG

08/02/05 21:22:50

# ISS-11 SHORT TERM PLAN PAYLOAD PAGE

CT 08/03/05 (215) 10 11 12 13 14 15 16 17 18 19 20 21

GMT 08/03/05 (215) 15 16 17 18 19 20 21 22 23 08/04 01 02

**ISS**

| | | | | | | | | | |
|---|---|---|---|---|---|---|---|---|---|
| DAY/NIGHT | | | | | | | | | |
| ORBIT | 2314 | 2315 | 2316 | 2317 | 2318 | 2319 | 2320 | 2321 | 2322 |
| DAILY ORBIT | 8 | 9 | 10 | 11 | 12 | 13 | 14 | 15 | 16 |
| TDRS AVAIL | | | | | | | | | |
| VHF | | | | | ALL VHF | ALL VHF | ALL VHF | ALL VHF | ALL VHF |

**KU SYS**

- LOCK-OPS-RECORDER: LOCK-OPS-RECORDER
- OCA-MAIL-SYNC: OCA-MAIL-SYNC; OCA-MAIL-SYNC
- IMS-AUTO-IM/EX W/PIP: IMS-AUTO-IM/EX W/PIP
- CHECS-KU-D/L: CHECS-KU-

**SBD**

- SSRMS-OCAS-DUMP: SSRMS-OCAS-DUMP
- ACS-CMG-DATA-DUMP: ACS-CMG-DATA-DUMP
- LOCK-OPS-RECORDER: LOCK-OPS-RECORDER
- ACS-CMG/STS ATT-H/O: ACS-CMG/STS ATT-H/O
- ACS-CMG-SURV-HTR-CL: ACS-CMG-SURV-HTR-CL
- ISS-RAP DPRS-INH: ISS-RAP DPRS-INH
- ACS-STS/CMG ATT-H/O: ACS-STS/CMG ATT-H/O
- UHF-1-DEACT: UHF-1-DEACT
- ACS-AH-MOM-MGMT-USTO: ACS-AH-MOM-MGMT-USTO
- IMV-DPRS-ENA: IMV-DPRS-ENA
- CMG-SAT-THRSHOLD: CMG-SAT-THRSHOLD
- AUDIO-UHF OPS-DCNFG: AUDIO-UHF OPS-DCNFG
- RS-CONTG-TLM: RS-CONTG-TLM; RS-CONTG-TLM; RS-CONTG-TLM
- O2-HP-VLV-CLOSE: O2-HP-VLV-CLOSE
- PPS-PCU-STANDBY: PPS-PCU-STANDBY
- C&T-VIDEO-DECONFG: C&T-VIDEO-DECONFG
- SSRMS-BASE-CHANGE: SSRMS-BASE-CHANGE
- DPC: DPC
- MSS-POWERDOWN: MSS-POWERDOWN
- OIU-4AC-TLM-SWAP: OIU-4AC-TLM-SWAP
- CHECS-COMMANDING: CHECS-COMMANDING; CHECS-COMMANDING
- CDH-EXT MDM MNTH-DMP: CDH-EXT MDM MNTH-DMP
- CDH-ECZ MDM MNTH-DMP: CDH-ECZ MDM MNTH-DMP
- SBD-KEY-CHG: SBD-KEY-CHG

**UNTPL**

- PCG STES-010-GROWTH: PCG STES-
- EXPRS1-SYS-PWR/THERM: EXPRS1-SY
- EXPRS4-SYS-PWR/THERM: EXPRS4-SY
- MAMS-P/L-NOM OPS: MAMS-P/L-
- SAMS-ICU/D1-OPS: SAMS-ICU/
- SAMS-RTS/D1-OPS: SAMS-RTS/
- SAMS-RTS/D2-OPS: SAMS-RTS/
- PRO-EXPRS FILE-CMD: PRO-EXPRS FILE-CMD; PRO-EXPRS FILE-CMD

**RS**

**MCC**

- ACS-CMG/STS ATT-H/O: ACS-CMG/STS ATT-H/O
- ACS-STS/CMG ATT-H/O: ACS-STS/CMG ATT-H/O
- ACS-AH-MOM-MGMT-USTO: ACS-AH-MOM-MGMT-USTO
- RS-CONTG-TLM: RS-CONTG-TLM; RS-CONTG-TLM
- MCC-H FCT H/O (2/3): MCC-H FCT H/O (2/3)
- CHECS-COMMANDING: CHECS-COMMANDING; CHECS-COMMANDING
- CHECS-KU-D/L: CHECS-KU-
- MCC-H FCT H/O (3/1): MCC-H FCT

ISS ATTITUDE: -XVV +ZLV TEA

*CMG TO STS
*STS TO CMG
*CMG TO STS
*STS TO CMG

NOTES:

# STS-114 LF1 (FD 09)

**REPLANNED**

GMT Date 08/03 (215) | TDRS E W Z | ORB | MET Day 007 | STS ATI | CDR COLLINS | PLT KELLY | MS1 NOGUCHI | MS2 ROBINSON | MCC

**FD09**

03:00 — 04:00 — 05:00 — 06:00

119 — 120 — 121 — 122

12:00 — 13:00 — 14:00 — 15:00 — 16:00

BIAS-XLV-ZVV

| CDR COLLINS | PLT KELLY | MS1 NOGUCHI | MS2 ROBINSON |
|---|---|---|---|
| SLEEP | SLEEP | SLEEP | SLEEP |
| SALIVA COLLECT (ORB OPS, DSO) | | | |
| POST-SLEEP ACTIVITY (ORB OPS, CREW SYS) | | POST SLEEP ACTIVITY (ORB OPS, CREW SYS)<br>GALLEY MORNING CONFIG (ORB OPS, ECLS) | POST-SLEEP ACTIVITY (ORB OPS, CREW SYS) |
| OIU ACTIVATION (ORB OPS, OIU)<br>OIU 1 Step 3 only<br>06 √UHF MODE - OFF<br>A/G PRIVATE MEDICAL CONFERENCE | POST-SLEEP ACTIVITY (ORB OPS, CREW SYS) | | |
| 10.2 PSI MAINTENANCE (EVA, 10.2 PSI CABIN) | | EVA PROCEDURE RVW Ref. MSG 102,105,109,110 | EVA PROCEDURE RVW Ref. MSG 102,105,109,110 |
| | | EVA PREP (EVA, EVA PREP) REF. MSG 021 ITEM 11 109 | EVA PREP (EVA, EVA PREP) REF. MSG 021 ITEM 11 109 |
| POST-SLEEP ACTIVITY (ORB OPS, CREW SYS) | | | |
| TV ILLUMINATOR OPS (PHOTO/TV, CUE CARD) ILLUMINATORS OFF - A,B,C,D<br>SHUTTLE/ISS H2O CONT FILL (ORB OPS, ECLS) INIT #13 Ref. MSG 106 | EXERCISE | | |

**FD09 EZ ACTIVITIES**
HARD REBOOT PGSCs (not WLES)
OCAC FILTER INSPECT
TEPC (STATUS CK)
(ORB OPS, CREW SYS)
L17 Check MCIU Filter Screen

# STS-114 LF1 (FD 09)

**REPLANNED**

GMT Date 08/03 (215) | TDRS E W Z | ORB | MET Day 007 | STS ATI

**FD09**

ORB: 119, 120, 121, 122

STS ATI: BIAS-XLV-ZVV

| MS3 THOMAS | MS4 LAWRENCE | MS5 CAMARDA | MCC |
|---|---|---|---|
| SLEEP | SLEEP | SLEEP | |
| | SALIVA COLLECT (ORB OPS, DSO) | SALIVA COLLECT (ORB OPS, DSO) | |
| | FLIGHT SLEEP LOG (ORB OPS, DSO) | FLIGHT SLEEP LOG (ORB OPS, DSO) | |
| POST-SLEEP ACTIVITY (ORB OPS, CREW SYS) | POST-SLEEP ACTIVITY (ORB OPS, CREW SYS) | POST-SLEEP ACTIVITY (ORB OPS, CREW SYS) | |
| EVA PROCEDURE RVW Ref. MSG 102,105,109,110 | | 10.2 PSI MAINTENANCE (EVA, 10.2 PSI CABIN) | |
| EVA PREP (EVA, EVA PREP) REF. MSG 021 ITEM 11 109 | EVA PREP (EVA, EVA PREP) REF. MSG 021 ITEM 11 109 | POST-SLEEP ACTIVITY (ORB OPS, CREW SYS) | |
| | | EXERCISE | |

# STS-114 LF1 (FD 09)

**REPLANNED**

GMT Date 08/03 (215) | TDRS E W Z | ORB | MET Day 007 | STS ATI

| MET | CDR COLLINS | PLT KELLY | MS1 NOGUCHI | MS2 ROBINSON | MCC |
|---|---|---|---|---|---|
| 16:00 | | EXERCISE | EMU PURGE/PREBREATHE (EVA, EVA PREP) REF. MSG 021 ITEM 12 | EMU PURGE/PREBREATHE (EVA, EVA PREP) REF. MSG 021 ITEM 12 109 ITEM 2 | |
| 07:00 | PRE-EVA 3 INHIBIT PAD (EVA, EVA 3) Ref. MSG 101,105 | OBSS TILE BOARD SURVEY Ref. MSG 107 Steps 1,2 | | | |
| 17:00 | SHUTTLE/ISS H2O CONT FILL (ORB OPS, ECLS) TERM Report Barcode & S/N to MCC<br>√DAP:FREE<br>Config DAP A,B to A13,B13 [A]<br>3.110 H/O ATT CONTROL CMG TO ORB (JOINT OPS, MATED OPS) | [A] WAIT a minimum of 30 secs after new DAP loads configured prior to procedural callout for DAP:AUTO | | | |
| 08:00 | R13L MMU GN2 SPLY ISOL VLV A - CL (tb-CL)<br>CABIN REPRESS TO 14.7 PSI (EVA, 10.2 PSI CABIN) Steps 1-4 ONLY MCC will TMBU S/W limits | ON MCC GO: 3.111 H/O ATT CONTROL ORB TO CMG (JOINT OPS, MATED OPS) | AIRLOCK DEPRESS (CUE CARD, DEPRESS/REPRESS)<br>EVA 3 EGRESS/SETUP (EVA, EVA 3) Ref. MSG 100 105 | AIRLOCK DEPRESS (CUE CARD, DEPRESS/REPRESS)<br>EVA 3 EGRESS/SETUP (EVA, EVA 3) Ref. MSG 100 105 | UPLINK<br>β 0° + C1,C2,C3+E4<br>BOX C1<br>-19<AZ<52<br>-67<EL<75<br>BOX C2<br>-41<AZ<-10<br>-25<EL<39<br>BOX C3<br>-72<AZ<-36<br>-4<EL<33<br>BOX E4<br>-60<AZ<-14<br>-55<EL<1 |
| 18:00 | | ISS INGRESS-POST A/L DEPRESS (EVA, DEPRESS/REPRESS) OMIT Step 20 | | | |
| 09:00 | √DAP:FREE<br>On MCC GO: Config DAP A,B to A12,B12<br>CWC TRANSFER Xfer 1 CWC bag to ISS | RWS CONFIG<br>1.614 ESP2 INSTALL (ROBOTICS, ESP2 INSTL EVA SPT) Steps 1-4<br>~~NOTE: NO EXERCISE~~<br>OBSS TILE BOARD SURVEY Ref. MSG 107 Steps 5-7 | ESP2 INSTALLATION (EVA, EVA 3) NOTE: NO EXERCISE Ref. MSG 100 105 | ESP2 INSTALLATION (EVA, EVA 3) NOTE: NO EXERCISE Ref. MSG 100 105 | |
| 19:00 | | 1.615 ESP2 UNGRAPPLE (ROBOTICS, ESP2 INSTL EVA SPT) | MISSE 5 INSTALL (EVA, EVA 3) Ref. MSG 100 105 | FRGF REMOVAL (EVA, EVA 3) Ref. MSG 100 105 | |
| 10:00 | | ESP2 BACKOFF TO MBS<br>PDGF1 PREGRAPPLE Ref. MSG 090 | | | |
| 20:00 | MEAL | 2.430 CONT WS4 MBS PDGF 1 GRAPPLE (ROBOTICS, CONT OPS) Steps 7-13 | | | |

# STS-114 LF1 (FD 09)

**REPLANNED**

GMT Date 08/03 (215) | TDRS E W Z | ORB | MET Day 007 | STS ATI

## MS3 THOMAS

- EMU PURGE/PREBREATHE (EVA, EVA PREP) REF. MSG 021 ITEM 12
- AIRLOCK DEPRESS (CUE CARD, DEPRESS/REPRESS)
- IVA SUPPORT FOR EVA

## MS4 LAWRENCE

- TRANSFER REVIEW Update Transfer List per MSG 108
- P/TV07 EVA (SETUP) (PHOTO/TV, SCENES)
- CONFIG DTV FOR DNLK L10(MUX) √MUX BYPASS - ACT MUX/VTR/CC PWR - ON
- EXERCISE
- ISS INGRESS-POST A/L DEPRESS (EVA, DEPRESS/REPRESS) OMIT Step 20
- RWS CONFIG
- 1.614 ESP2 INSTALL (ROBOTICS, ESP2 INSTL EVA SPT) Steps 1-4 NOTE: NO EXERCISE
- 1.615 ESP2 UNGRAPPLE (ROBOTICS, ESP2 INSTL EVA SPT)
- ESP2 BACKOFF TO MBS PDGF1 PREGRAPPLE Ref. MSG 090
- 2.430 CONT WS4 MBS PDGF 1 GRPL (ROBOTICS, CONT OPS) Steps 7-13

## MS5 CAMARDA

- TRANSFER REVIEW Update Transfer List per MSG 108
- OBSS TILE BOARD SURVEY Ref. MSG 107 Steps 1,2
- CABIN REPRESS TO 14.7 PSI (EVA, 10.2 PSI CABIN) Steps 1-4 ONLY MCC will TMBU S/W limits
- OBSS TILE BOARD SURVEY Ref. MSG 107 Steps 3-7
- TRANSFER Ref. MPLM TRANSFER LIST

## MCC

- PRE-EVA 3 INHIBIT PAD (EVA, EVA 3) Ref. MSG 101,105

Time scale: 07:00, 08:00, 09:00, 10:00; 16:00, 17:00, 18:00, 19:00, 20:00

# STS-114 LF1 (FD 09)

**REPLANNED**

GMT Date 08/03 (215) | TDRS E W Z | ORB 124 125 126 127 | MET Day 007 | STS ATI

CDR COLLINS | PLT KELLY | MS1 NOGUCHI | MS2 ROBINSON | MCC

20:00

2.430 CONT WS4 MBS PDGF 1 GRAPPLE
(ROBOTICS, CONT OPS)
Steps 7-13

OBSS TILE BOARD SURVEY
Ref. MSG 107
Step 8

2.431 CONT LAB PDGF UNGRAPPLE
(ROBOTICS, CONT OPS)

RJMC REMOVAL
Ref. MSG 100
105

GAP FILL TOOL PREP
Ref. MSG 100
102
105

11:00

MEAL

21:00

GAP FILLER EVA INHIBIT PAD
(EVA, EVA 3)
Ref. MSG 101,105

SSRMS SETUP
Ref. MSG 092 Steps 1-3
MSG 100, MSG 105

SSRMS SETUP
Ref. MSG 100
105

SSRMS SETUP
Ref. MSG 100
105

MCC:
UPLINK
β0°+ C1 + G1
BOX C1
-19<AZ<52
-67<EL<75
BOX G1
144<AZ<-14
-57<EL<59

12:00

EVA-GAP FILLER SUPPORT
Ref. MSG 092 Steps 4-16
100
105

COMM ASSIST & ISS TASKS
Ref. MSG 100
105

GAP FILLER REMOVAL 1(2)
Ref. MSG 100
105

BIAS-XLV-ZVV

22:00

13:00

23:00

A
WAIT a minimum of 30 secs after new DAP loads configured prior to procedural callout for DAP:AUTO

14:00

√DAP:FREE
Config DAP A,B to A13,B13 A
ISS EGRESS FOR SHUTTLE EVA
(EVA, DEPRESS/REPRESS)
Ref. MSG 103 Item 4

OBSS TILE BOARD SURVEY
Ref. MSG 107
Steps 9,10

CLEANUP/INGRESS
(EVA, EVA 3)
Ref. MSG 100
105

CLEANUP/INGRESS
(EVA, EVA 3)
Ref. MSG 100
105

MCC:
PERFORM AFTER GAP FILLER:
UPLINK
β0°+ C1,C2,C3+E1
BOX C1
-19<AZ<52
-67<EL<75
BOX C2
-41<AZ<-10
-25<EL<39
BOX C3
-72<AZ<-36
-4<EL<33
BOX E1
-50<AZ<0
-67<EL<0

00:00

# STS-114 LF1 (FD 09)

**REPLANNED**

GMT Date 08/03 (215) | TDRS E W Z | ORB | MET Day 007 | STS ATI

MS3 THOMAS

IVA SUPPORT FOR EVA

MS4 LAWRENCE

2.430 CONT WS4 MBS PDGF 1 GRPL
(ROBOTICS, CONT OPS)
Steps 7-13

2.431 CONT LAB PDGF UNGRAPPLE
(ROBOTICS, CONT OPS)

SSRMS SETUP
Ref. MSG 092 Steps 1-3
MSG 100, MSG 105

EVA-GAP FILLER SUPPORT
Ref. MSG 092 Steps 4-16
100
105

ISS EGRESS FOR SHUTTLE EVA
(EVA, DEPRESS/REPRESS)
Ref. MSG 103 Item 4

MS5 CAMARDA

TRANSFER
Ref. MPLM TRANSFER LIST

OBSS TILE BOARD SURVEY
Ref. MSG 107
Step 8

MEAL

TRANSFER
Ref. MPLM TRANSFER LIST

OBSS TILE BOARD SURVEY
Ref. MSG 107
Steps 9,10

MCC

GAP FILLER EVA INHIBIT PAD
(EVA, EVA 3)
Ref. MSG 101,105

BIAS -XLV -ZVV

# STS-114 LF1 (FD 09)

**REPLANNED**

GMT Date 08/03 (215) | TDRS E W Z | ORB | MET Day 008 | STS ATI

CDR COLLINS | PLT KELLY | MS1 NOGUCHI | MS2 ROBINSON | MCC

00:00

3.110 H/O ATT CONTROL CMG TO ORB
(JOINT OPS, MATED OPS)
WVS PWRDN
(PHOTO/TV, CUE CARD)

CLEANUP/INGRESS
(EVA, EVA 3)
Ref. MSG 100
105

CLEANUP/INGRESS
(EVA, EVA 3)
Ref. MSG 100
105

15:00

127

WCS COMPACTOR OPS (DUAL-VANE)
(ORB OPS, CUE CARD)

AIRLOCK REPRESS
(CUE CARD, DEPRESS/REPRESS)

AIRLOCK REPRESS
(CUE CARD, DEPRESS/REPRESS)

UPLINK
β 21° +C1,C2,C3+E1
BOX C1
-19<AZ<52
-67<EL<75
BOX C2
-41<AZ<-10
-25<EL<39
BOX C3
-72<AZ<-36
-4<EL<33
BOX E1
-50<AZ<0
-67<EL<0

3.111 H/O ATT CONTROL ORB TO CMG
(JOINT OPS, MATED OPS)
√DAP:FREE
On MCC GO: Config DAP A,B to A12,B12

ISS INGRESS-POST EVA
(EVA, DEPRESS/REPRESS)

POST EVA
(EVA, POST EVA)
PERFORM:
EMU WATER RECHARGE/FILL VERIF
Ref. MSG 109

POST EVA
(EVA, POST EVA)
PERFORM:
EMU WATER RECHARGE/FILL VERIF
Ref. MSG 109

01:00

1.413 LAB PDGF GRAPPLE
(ROBOTICS, TILE RPR DTO EVA SPT)
Step 5

16:00

128

EXERCISE

OIU DEACTIVATION (ORB OPS, OIU)
Expect S62 BCE BYP PSP 1 MSG

OVERNIGHT ISS SURVEY:
R12(VPU) Green Jumper - LDRI/ITVC
R12(OBSS) ITVC ENA - ON

BIAS-XLV-ZVV

02:00

TV ILLUMINATOR OPS
(PHOTO/TV, CUE CARD)
ILLUMINATORS ON - A,B,C,D

STOW EXPIRED SAFETY TETHERS
IN CTB

17:00

PRE-SLEEP ACTIVITY
(ORB OPS, CREW SYS)

PRE-SLEEP ACTIVITY
(ORB OPS, CREW SYS)

CONFIG ODS DRAG
THROUGHS FOR SLEEP

06 √UHF MODE - OFF
A/G PRIVATE MEDICAL CONFERENCE

03:00

129

PRE-SLEEP ACTIVITY
(ORB OPS, CREW SYS)

PRE-SLEEP ACTIVITY
(ORB OPS, CREW SYS)

GALLEY OVERNIGHT CONFIG
(ORB OPS, ECLS)

18:00

PRE-SLEEP ACTIVITY
(ORB OPS, CREW SYS)

04:00

# STS-114 LF1 (FD 09)

**REPLANNED**

GMT Date 08/03 (215) | TDRS E W Z | ORB | MET Day 008 | STS ATI

## MS3 THOMAS

IVA SUPPORT FOR EVA

AIRLOCK REPRESS
(CUE CARD, DEPRESS/REPRESS)

POST EVA
(EVA, POST EVA)
PERFORM:
EMU WATER RECHARGE/FILL VERIF
Ref. MSG 109

REBA BATTERY RECHARGE (INIT-In suit)
(EVA, EMU MAINT/RECHARGE)

PRE-SLEEP ACTIVITY
(ORB OPS, CREW SYS)

## MS4 LAWRENCE

ISS INGRESS-POST EVA
(EVA, DEPRESS/REPRESS)

1.413 LAB PDGF GRAPPLE
(ROBOTICS, TILE RPR DTO EVA SPT)
Step 5

PRE-SLEEP ACTIVITY
(ORB OPS, CREW SYS)

DAILY STS/ISS CREW TRANSFER TAGUP

DAILY TRANSFER BRIEFING

PRE-SLEEP ACTIVITY
(ORB OPS, CREW SYS)

## MS5 CAMARDA

PWR FILL
(ORB OPS, ECLS)
Ref. MSG 106

SETUP: 760 EVA-CAMR W/FLASH
DISASSEMBLY (POST EVA)
(PHOTO/TV, DCS 760 EVA)

PRE-SLEEP ACTIVITY
(ORB OPS, CREW SYS)

## MCC

BIAS-XLV-ZVV

# STS-114 LF1 (FD 09)

**REPLANNED**

GMT Date 08/03 (215) | TDRS E W Z | ORB | MET Day 008 | STS ATI

CDR COLLINS | PLT KELLY | MS1 NOGUCHI | MS2 ROBINSON | MCC

04:00

PRE-SLEEP ACTIVITY (ORB OPS, CREW SYS)

PRE-SLEEP ACTIVITY (ORB OPS, CREW SYS)

CONFIG ODS DRAG THROUGHS FOR SLEEP

PRE-SLEEP ACTIVITY (ORB OPS, CREW SYS)

GALLEY OVERNIGHT CONFIG (ORB OPS, ECLS)

PRE-SLEEP ACTIVITY (ORB OPS, CREW SYS)

**CREW WAKEUP MET 8/12:30**

19:00 — 130

05:00

20:00

BIAS-XLV-ZVV

06:00 — 131

SLEEP | SLEEP | SLEEP | SLEEP

21:00

07:00

22:00 — 132

08:00

# STS-114 LF1 (FD 09)

**REPLANNED**

GMT Date 08/03 (215) | TDRS E W Z | ORB | MET Day 008 | STS ATI

MS3 THOMAS | MS4 LAWRENCE | MS5 CAMARDA | MCC

04:00 — 05:00 — 06:00 — 07:00 — 08:00

19:00 — 20:00 — 21:00 — 22:00

130 — 131 — 132

BIAS -XLV -ZVV

PRE-SLEEP ACTIVITY (ORB OPS, CREW SYS)

PRE-SLEEP ACTIVITY (ORB OPS, CREW SYS)

PRE-SLEEP ACTIVITY (ORB OPS, CREW SYS)

**CREW WAKEUP MET 8/12:30**

SLEEP

SLEEP

SLEEP

Good Morning Discovery!

It was a joy to watch your PAO events today. We hope you enjoyed them as much as we did.

Another day, another EVA! We are all anticipating your demonstration of "how to shave a shuttle's chin". The EVA, PDRS and Robotics teams have been working around the clock and really appreciate your flexibility, professionalism and inputs in preparing for today.

On the flight plan today, you will notice that the RCC plug demo has been moved to Flight Day 10 and that the Tile Board Survey has been moved up.

Have a great day!

ISS Summary
CMG 1 spinup was completed and CMG1 was added to the steering law at about 6/18:15 MET.

YOUR CURRENT ORBIT IS: 194 X 188 NM

NOTAMS:

EDWARDS (EDW) - LAKEBED RWY 15 GREEN, RWY 18 CLOSED
WHITE SANDS (NOR) - LAKEBEDS GREEN
OCEANA (NTU) - RWY 23L/05R CLOSED
HALIFAX (YHZ) - RWY 06/24 CLOSED
GUAM (GUA) - RWY 06L/24R CLOSED
RIO GALLEGOS (AWG) - NOT APPROVED
ELMENDORF (EDF) - RWY 06/24 CLOSED
TINDAL (PTN) - TACAN TDL 70 UNUSABLE

NEXT 2 PLS OPPORTUNITIES:

EDW22 ORB 126 - 7/22:41
EDW22 ORB 141 - 8/21:33

OMS TANK FAIL CAPABILITY:

L OMS FAILS: NO
R OMS FAILS: NO

LEAKING OMS PRPLT BURN:

L OMS LEAK: ALWAYS BURN RETROGRADE
R OMS LEAK: ALWAYS BURN RETROGRADE

POST-TI OMS QUANTITIES(%)

L OMS OX = 35.2 R OMS OX = 36.6
FU = 35.6 FU = 37.3

SUBTRACT I'CNCT COUNTER FOR CURRENT OMS QUANTITIES

| DELTA V AVAILABLE: | WITH MPLM | NO MPLM |
|---|---|---|
| OMS | 323 FPS | 333 FPS |
| ARCS (TOTAL ABOVE QTY1) | 27 FPS | 30 FPS |
| TOTAL IN THE AFT | 350 FPS | 363 FPS |
| ARCS (TOTAL ABOVE QTY2) | 57 FPS | 61 FPS |
| FRCS (ABOVE QTY 1) | 29 FPS | 31 FPS |
| AFT QTY 1 | 82 % | 82% |
| AFT QTY 2 | 44 % | 44% |

THERE ARE NO FAILURE/IMPACT/WORK AROUNDS FOR TODAY.

# MSG 102 (11-0709) - EVA 3 GAP FILLER REMOVAL MWS TOOL CONFIG



Below you'll find photo documentation of the recommended tool config for the gap filler removal task.

MWS T-Bar Fully Stowed

2 Wire Ties wrapped around T-Bar

Right Swingarm Stowed

BRT with Digital Camera positioned behind body

Gap filler cutters (hack saw) installed in trash bag tip down: tethered using RET to trash bag tether point

Forceps inside GP caddy: tethered using caddy integral RET

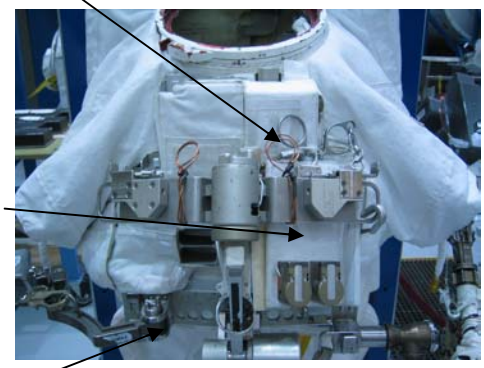

RET for GP caddy is routed from tether point on back of caddy, inside of MWS, to MWS tether point

Trash bag on swingarm outer bayonet fitting: RET is routed from trash bag tether point, behind trash bag, and back to swingarm tether point

MWS EE Stowed on T-Bar Neck

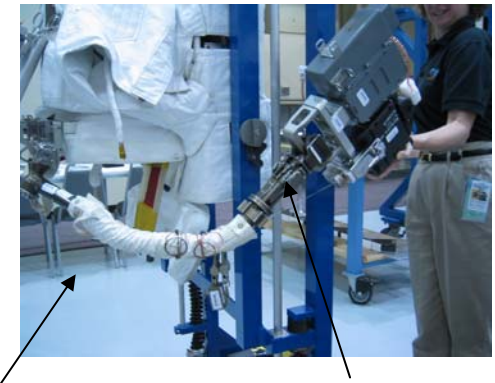

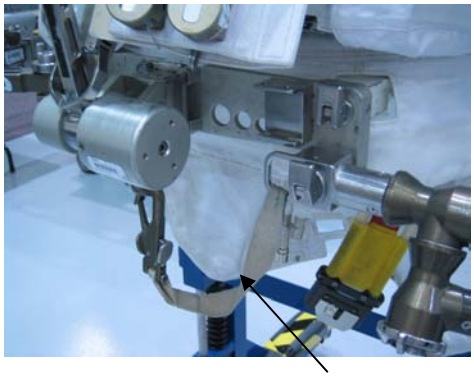

2 wire ties on BRT

BRT around back of EMU, tethered to dig camera via camera bracket integral RET

BRT tethered to tether point on bottom of MWS using BRT integral tether

Good Morning! It's a great day to take a stroll outside... Your EVA team is ready for the EVA today but has a few minor updates to the procedures. Some removal torques have been increased, the post EVA 3 tool config has been updated, and the Robotics team has improved the callouts for the Gap Filler task.

**1. EVA 3 TOOL CONFIG (MSG 100), pg 2, Post-EVA 3 Tool Configuration:**

A. Place the updated Post EVA 3 Tool Config as 2a (see attached file); it will replace the right column on pg 2.

**2. IV/RMS Changes:**

A. ESP-2 INSTALLATION (MSG 100), pg 4: Delete Step 1 (already complete)

B. GAP FILLER REPAIR (MSG 100), pg 11: Delete Step 10, and move Step 9 to pg 14 at EV1 step 8

C. GAP FILLER REPAIR (MSG 100), pg 12: Add 'On GO from EV2, apply SSRMS brakes' at EV2 Steps 14 and 23

D. GAP FILLER REPAIR (MSG 100), pg 13: Note that step 15 should be indented such that the call out is still under panel A1R

E. CLEANUP/INGRESS (MSG 100), pg 14: Add 'On EV2 Go, maneuver to the JOCAS Setup position' at EV2 step 5a

**3. EV1 Changes:**

A. MISSE 5 INSTALL / FRGF REMOVAL (MSG 100), pg 6:
After the WARNING block, Add: '<u>CAUTION</u>: S-band antenna active, maintain 1 meter KOZ'

B. RJMC REMOVAL / GAP FILLER SETUP (MSG 100), pg 8, EV1 Step 7 & Step 8
WAS: **PGT [B7, CCW2, 23.5]** and **PGT [B4, CCW2, 23.5]** respectively
IS: **PGT [B7, CCW2, 30.5]** for both

**4. EV2 Changes:**

A. MISSE 5 INSTALL / FRGF REMOVAL (MSG 100), pg 6, EV2 Step 15 & Step 19
WAS: **PGT [B1, CCW2, 30.5]**
IS: **PGT [B6, CCW2, 30.5]**

B. GAP FILLER REPAIR (MSG 100), pg 11, EV2 (FF):
Add NOTE: In Step 13, SSRMS can only provide 15 degrees of pitch, rest will have to be from EV2

C. CLEANUP/INGRESS (MSG 100), pg 14, EV2 (FF):
Add Step 5a 'When clear of SSRMS, give IV/RMS GO to move to the JOCAS Setup position'

D. CLEANUP/INGRESS (MSG 100), pg 14, EV2 (FF) Step 8:
WAS: Outer Hatch Equal vlv (one) - NORM
IS: Port Outer Hatch Equal vlv (one) - NORM

**5. EVA 3 UPDATED INHIBIT PAD (MSG 101)**

A. Page 1, USOS Block, Lab Window, IV Step 1

WAS: Close Window

IS: Verify Lab Window Shutter Closed

B. Page 2, USOS Block, Lab Window, IV Step 1

WAS: Close window shutter if EV crew near window

IS: Verify Lab Window Shutter Closed

Use to replace Post-EVA 3 Tool Configuration in MSG 100

**Post-EVA 3 Tool Configuration**

❑❑ MWS – [+]
❑❑ Right Swing Arm – [+]
❑❑❑❑ Wire Ties on T-bar – [+]
❑❑ BRT – [+]
❑❑❑❑ Wire ties on BRT – [+]
❑❑ Trash Bag – [+]
❑❑❑❑ D-ring Extender – [+]
❑❑ Old Safety tether – [2 old to 0.5 tether CTB]
❑❑ New Safety Tether – [+]
❑❑ 85 ft Safety Tether – [+]
❑❑❑❑ Waist Tether – [+]
❑❑ Socket Caddy – [+]
❑❑ PGT – [+]
❑ Crewlock bag – [+]
❑❑ Digital Camera – [+]
❑ Wire tie Caddy – [+]
❑❑ WIF Adapter – [+]
❑❑ Fuse tether – [MF57K]
❑ RAD – [+]
❑ 6-in socket – [+]
❑❑ 2-in socket – [+]
❑ Ingress Aid – [+]
❑❑❑❑❑❑ Adj Tether – [+]
❑❑❑❑❑❑❑❑❑ RET – [+]

Post EVA Symbols
[+] – covered in FD11 EVA transfer procedure

**Lab WIF 9**

❑ APFR [_____]

**ESP2 WIF 3**

❑ WIF Extender [_____]

FD09 Water Activity Details:

For the H2O fill activities on CDR—

MET 7/15:45 –There is one CWC fill scheduled for today. Use the CWC with S/N 1063 located in the Middeck. Perform this fill using CWC FILL in SHUTTLE/ISS H2O CONTAINER FILL (ORB OPS,ECLS), p. 5–26, and expect the fill to last about 56 minutes. The additives are Silver biocide and minerals, and a sample is required; this sample should be stowed in MF43E.

Following the CWC fill, squeeze the CWC and inspect the outer canvas cover and all fittings for cracks and leaks; report the bag's condition to MCC along with its Barcode. Also, this is the last Potable CWC to be filled on this flight, so after this fill is complete the Mineral Syringe Kit (S/N 1001) is no longer needed.

Transfer the filled CWC (S/N 1063) and the Mineral Syringe Kit (S/N 1001) to ISS: the Mineral Syringe Kit (S/N 1001) should be transferred to MPLM MPL2P2_A1 for return. Report the stowage location of the filled CWC to MCC.

For the H2O activities on MS5—

MET 8/00:15 – Fill the lone remaining PWR that was temp-stowed after being vented on FD06 (S/N 1012). Use PWR FILL (ORB OPS, ECLS), p. 5–43. Note that Steps 1 and 14 of this procedure are not req'd.

Transfer the filled PWR (S/N 1012) and stow it in the ISS A/L Equipment Lock Floor Bin

Overview of Remaining CWC Fills for the Mission and Expected Storage Locations—

| CWC Fill | Sample? | S/N | Current Location |
|---|---|---|---|
| # 14 | No Sample | One of 1007, 1012, 1046, 1047 | NOD1P2 M-02 Bag |
| # 15 | No Sample | One of 1007, 1012, 1046, 1047 | NOD1P2 M-02 Bag |
| # 16 | No Sample | One of 1007, 1012, 1046, 1047 | NOD1P2 M-02 Bag |
| # 17 | Sample | One of 1007, 1012, 1046, 1047 | NOD1P2 M-02 Bag |
| # 18 | No Sample | One of 1052, 1055, 1057 | NOD1P2 M-02 Bag* |
| # 19 | No Sample | One of 1052, 1055, 1057 | NOD1P2 M-02 Bag* |

* Located within the "Inflight Stowage Restraint Bag"

– After today, all remaining fills will be Technical (only additive: Silver biocide).
– Note that following completion of all planned CWC fills, one of the CWCs with S/Ns 1052, 1055, and 1057 will remain empty in ISS NOD1P2 N-02 Bag.

**OBSS TILE BOARD SURVEY - REVISED**

NOTE
Assumed starting posn is CMG R&R Viewing. SINGLE mode coarse and vernier joint rates are the same for PLID 3

1. SETUP

SM 94 PDRS CONTROL

√ PL ID, ITEM 3: 3
√ INIT ID, ITEM 24: 3

CMG R&R VIEWING posn:

| | X | Y | Z | PITCH | YAW | ROLL | PL ID |
|---|---|---|---|---|---|---|---|
| √ | -622 | -740 | -1095 | 91 | 4 | 265 | 3 |
| | SY | SP | EP | WP | WY | WR | |
| √ | +95.0 | +38.7 | -22.8 | -0.5 | -0.3 | +22.3 | |

A7U VIDEO OUT MUX 1 L pb – push (MIDDECK lt on)
LDRI MODE 1 pb – push (ITVC video)

VIDEO OUT MON2 pb – push
IN PL2(VPU) pb – push

2. MNVR TO TILE BOARD POSN 1

BRAKES – OFF (tb-OFF)
MODE – SINGLE, ENTER

Mnvr to TILE BOARD POSN 1:

| | SY | SP | EP | WP | WY | WR | |
|---|---|---|---|---|---|---|---|
| CMG R&R VIEWING | +95.0 | +38.7 | -22.8 | -0.5 | -0.3 | +22.3 | |
| 1: WR – | | | | | | -42.7 | |
| 2: WP + | | | | +104.4 | | | |
| 3: SP – | | +32.7 | | | | | |
| 4: SY – | +56.2 | | | | | | |
| 5: EP – | | | -27.3 | | | | |
| 6: WY – | | | | | -14.6 | | |
| TILE BOARD POSN 1 | +56.2 | +32.7 | -27.3 | +104.4 | -14.6 | -42.7 | [1] |

| X | Y | Z | PITCH | YAW | ROLL | PL ID |
|---|---|---|---|---|---|---|
| -1255 | -39 | -487 | 350 | 302 | 171 | 3 |

[1] ITVC-to-Tile Board Box lid = 16.6 in min, during lid opening

BRAKES – ON (tb-ON)
MODE – not DIRECT
JOINT – CRIT TEMP

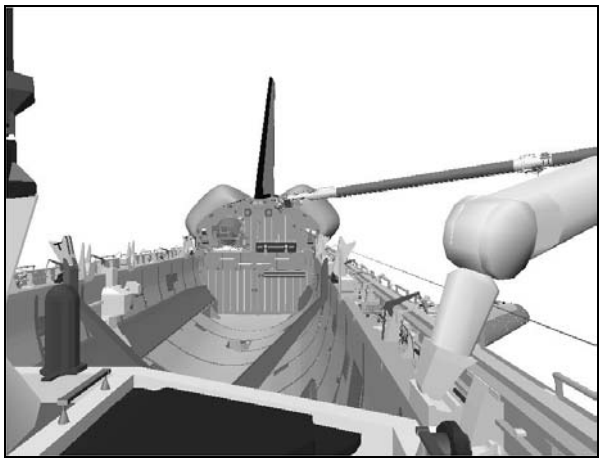

**CCTV A (0,0)**

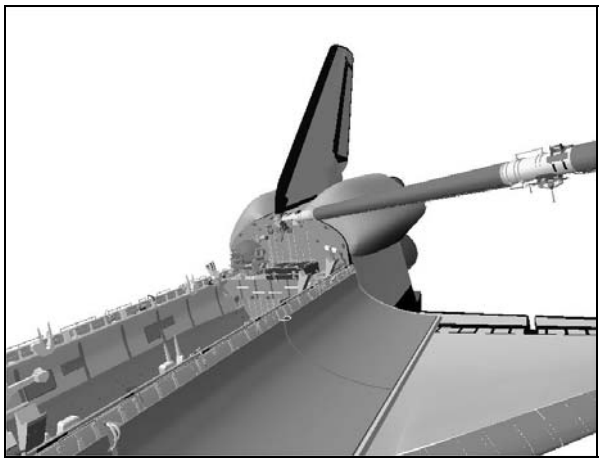

**ELBOW (-86,28)**

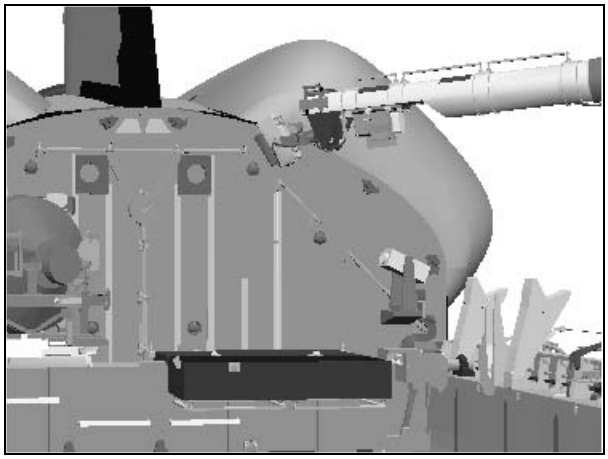

**CCTV D (10,1) HFOV: 16.0**

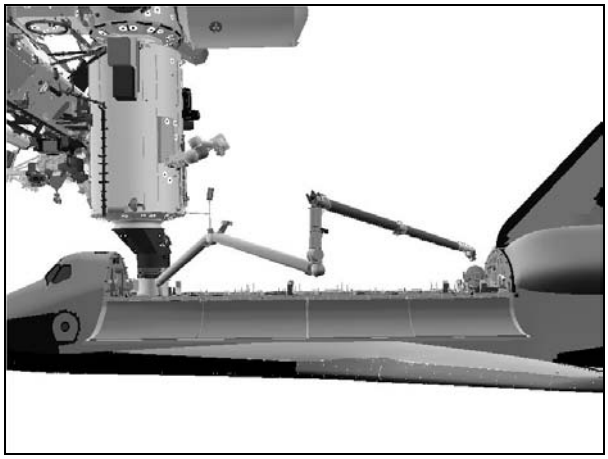

**PORT**

3. CONFIGURE OBSS LDRI FOR TILE BOARD NORMAL SURVEY

| CAUTION |
|---|
| Do not perform Step 3 until EV crewmembers > 9 ft from LDRI |

A7U CAMR CMD PAN/TILT – HI RATE (LO within 10°)
PAN – L (to hard stop)
TILT – UP (to hard stop)
PAN/TILT – RESET

PAN: +87 (right)
TILT: -86 (down)

VIDEO OUT MUX 1 L pb – push (MIDDECK lt on)
LDRI MODE 6 pb – push (brighter flickering LDRI video)

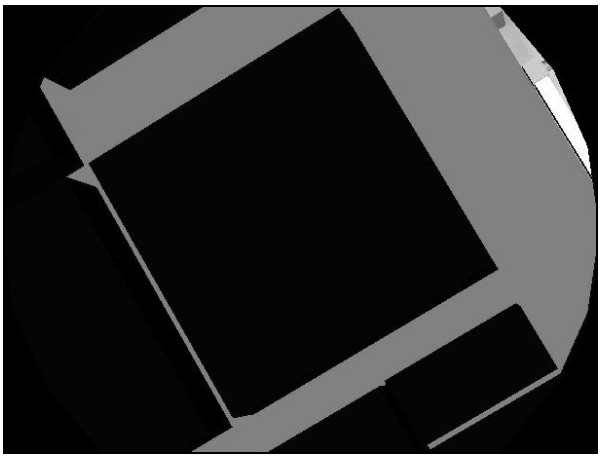

**LDRI (87,-86)**

√MCC for DSR sync on LDRI data

NOTE

The following scans are being performed to compare LDRI image quality between Posn Hold and BRAKES - ON

BRAKES – OFF (tb-OFF)

L10(VTR) REC pb – push, hold
PLAY pb – push, simo (red ●)

Wait 2 min

BRAKES – ON (tb-ON)

Wait 2 min

STOP pb – push (no red ●)

4. CONFIGURE SENSORS FOR TILE BOARD POSN 2

A7U VIDEO OUT MON2 pb – push (PL2 lt on)

√PAN: +87
TILT: -60 (up)

L12U APCU 2 CONV – OFF (tb-bp)
APCU 2 CONV – ON (tb-on)

Perform LCC ACTIVATION (LCS Cue Card, PHOTO/TV)

Wait 15 min prior to performing detailed area scans

5. MNVR TO TILE BOARD POSN 2

NOTE

1. VTR is recording during mnvr between TILE BOARD POSN 1 and POSN 2
2. Steps 5 thru 6 may be terminated at any time if PLT required to resume SSRMS ops
3. Step 7 must be performed prior to mnvring to GAP FILLER VIEWING POSN
4. Step 8, MNVR TO GAP FILLER VIEWING POSN, may be performed from TILE BOARD POSN 1

CAUTION

At TILE BOARD POSN 2, OBSS-to-CMG = 24 in, OBSS-to-Aft Bulkhead = 24 in

L10(VTR) REC pb – push, hold
PLAY pb – push, simo (red ●)

RATE – COARSE (RATE MIN tb-OFF)
BRAKES – OFF (tb-OFF)
MODE – ORB LD, ENTER

Mnvr to TILE BOARD POSN 2:

| X | Y | Z | PITCH | YAW | ROLL | PL ID |
|---|---|---|---|---|---|---|
| -1273 | -11 | -487 | 350 | 302 | 171 | 3 |
| SY | SP | EP | WP | WY | WR | |
| +52.8 | +39.8 | -41.3 | +109.8 | -16.3 | -46.5 | |

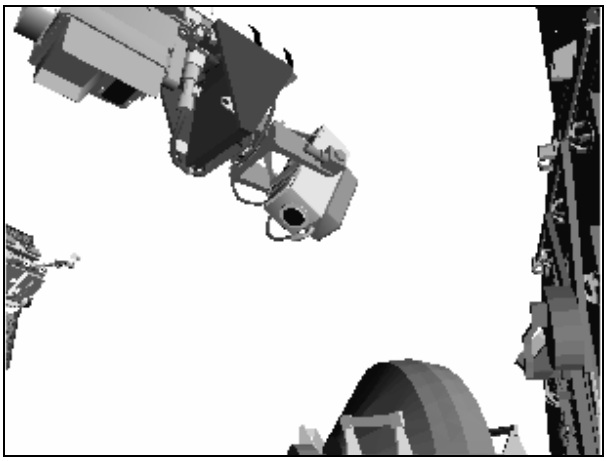

**CCTV B (73,22)**

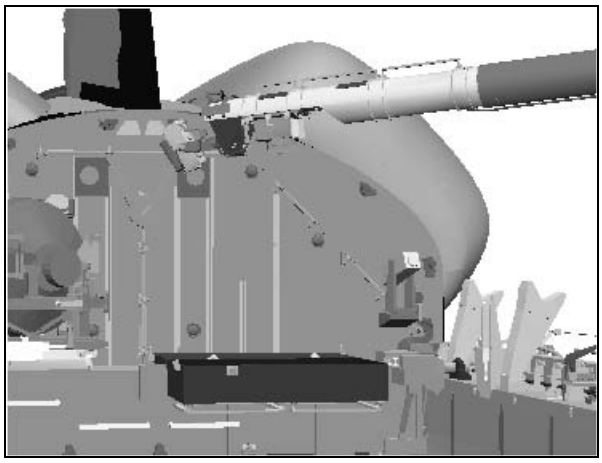

**CCTV D (10,1) HFOV: 16.0**

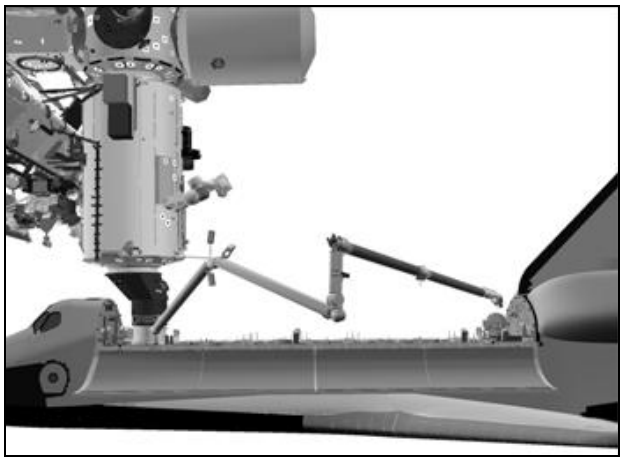

**PORT**

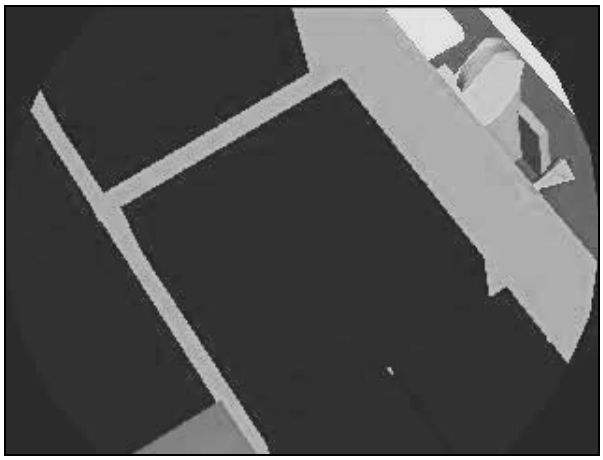

**LDRI (87,-60)**

6. <u>LCS TILE BOARD SCAN</u>

C3 S-BAND PM ANT – LR FWD

<u>NOTE</u>

LCS Detailed Area Scans are expected to take ~ 95 sec but no more than 3 min max. The following Detailed Area Scans are being performed to compare LCS image quality between Posn Hold and BRAKES - ON

LCC/ PGSC
'Scanning' 'Detailed Area Scan'
sel – 14 Nose Cap
**cmd** Start Area Scan (verify Scan Line - Done)

sel – 15 Nose Cap
**cmd** Start Area Scan (verify Scan Line - Done)

BRAKES – ON (tb-ON)
MODE – not DIRECT

Allow arm motion to damp-out for at least 90 sec, then:

LCC/ PGSC
'Scanning' 'Detailed Area Scan'
sel – 14 Nose Cap
**cmd** Start Area Scan (verify Scan Line - Done)

sel – 15 Nose Cap
**cmd** Start Area Scan (verify Scan Line - Done)

C3 S-BAND PM ANT – GPC

7. CONFIGURE SENSORS

L10(VTR) STOP pb – push (no red ●)

A7U VIDEO OUT MUX 1 L pb – push (MIDDECK lt on)
LDRI MODE 1 pb – push (ITVC video)

VIDEO OUT MON2 pb – push (PL2 lt on)

√MCC to verify all LCS files downlinked

Perform LCC DEACTIVATION, (LCS Cue Card, PHOTO/TV), steps 1 and 2

8. MNVR TO GAP FILLER VIEWING POSN

BRAKES – OFF (tb-OFF)
MODE – SINGLE, ENTER

Mnvr to GAP FILLER VIEWING POSN:

| | SY | SP | EP | WP | WY | WR | |
|---|---|---|---|---|---|---|---|
| TILE BOARD POSN 2 | +52.8 | +39.8 | -41.3 | +109.8 | -16.3 | -46.5 | |
| 1: WY + | | | | | -0.3 | | |
| 2: EP + | | | -22.8 | | | | |
| 3: SY + | +95.0 | | | | | | |
| 4: SP – | | +38.7 | | | | | |
| 5: WP – | | | | -0.5 | | | |
| 6: WR – | | | | | | -100.0 | |
| GAP FILLER VIEWING | +95.0 | +38.7 | -22.8 | -0.5 | -0.3 | -100.0 | |
| | X | Y | Z | PITCH | YAW | ROLL | PL ID |
| | -1137 | -718 | -197 | 328 | 2 | 276 | 3 |

BRAKES – ON (tb-ON)
MODE – not DIRECT
PARAM – PORT TEMP
JOINT – CRIT TEMP

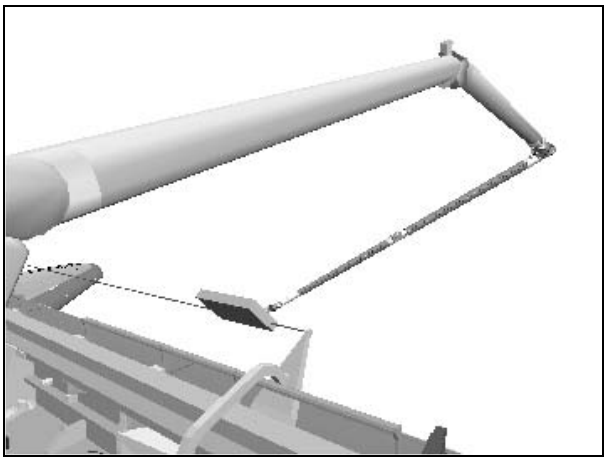

**CCTV A (55,-5)**

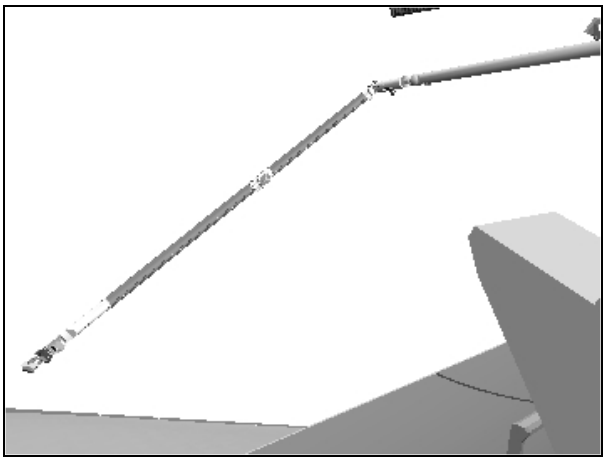

**CCTV B (-50,-10)**

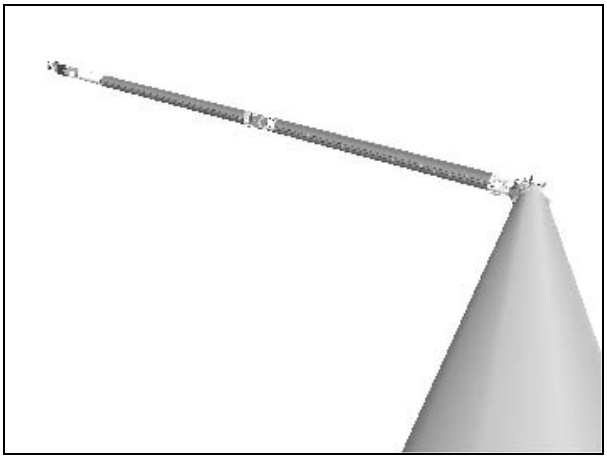

**ELBOW (-30,-10)**

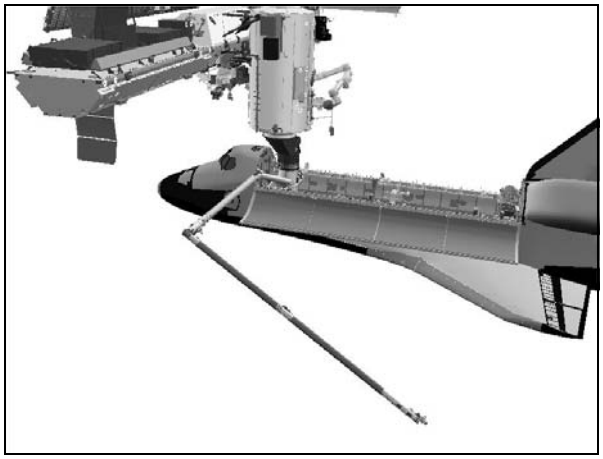

**BIRD'S EYE**

PAN: +105 (right)
TILT: -45 (up)

Adjust pan/tilt/zoom as reqd

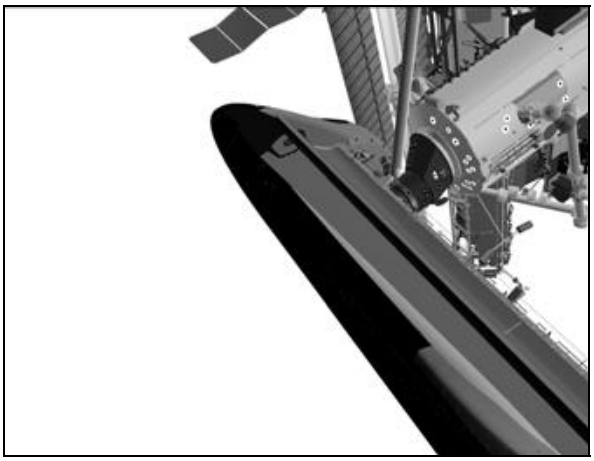

**OBSS ITVC (105,-45)**

A7U VIDEO OUT MUX 1 L pb – push (MIDDECK lt on)
LDRI MODE 2 pb – push (ITVC video w/laser illum.)

VIDEO OUT MON2 pb – push (PL2 lt on)

9. <u>MNVR TO CMG R&R VIEWING POSN</u>
BRAKES – OFF (tb-OFF)
MODE – SINGLE, ENTER

Drive WR (+) to +22.3

BRAKES – ON (tb-ON)
MODE – not DIRECT
PARAM – PORT TEMP
JOINT – CRIT TEMP

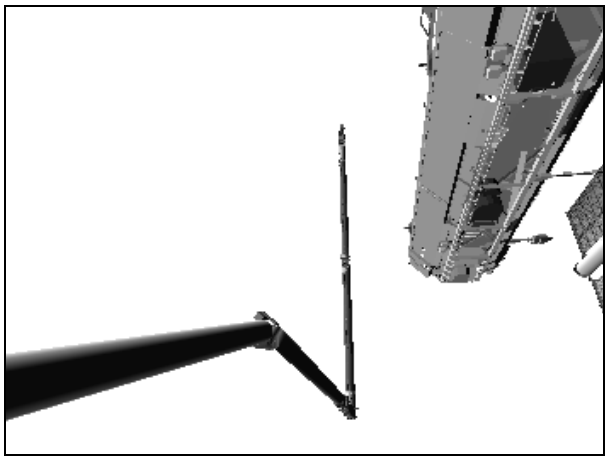

**CCTV A (80,30)**

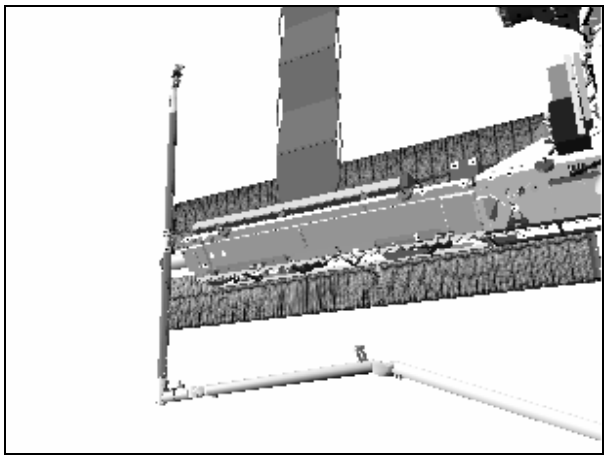

**CCTV B (-30,20)**

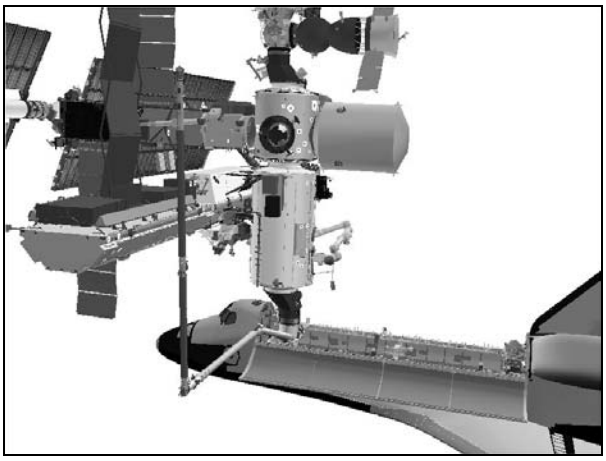

**BIRD'S EYE**

10. <u>CONFIGURE OBSS ITVC AND LDRI FOR CMG R&R VIEWING</u>

A7U √PAN: +105
TILT: -55 (down)

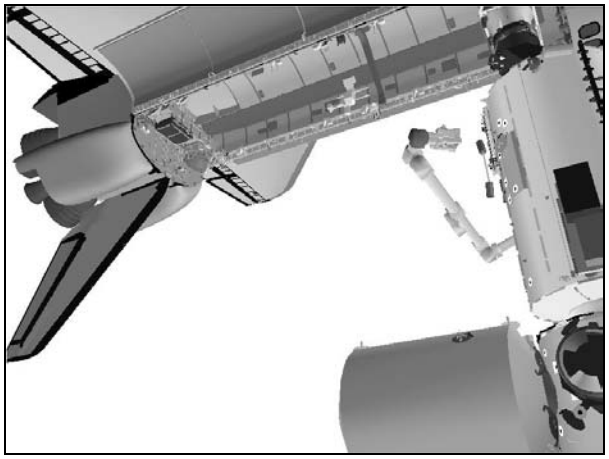

**OBSS ITVC (105,-55)**

Good morning Wendy, Charlie, and crew!

Great job on packing the MPLM! You're making it seem so easy!

The three M-bag drawings you requested (A1_A1, F3_A1, and F4_H1) are on the following pages.

The Transfer List Excel file, LF1_TransferList_FD08.xls, is located on the KFX machine in **C:\OCA-up\transfer.**

For ISS, the Transfer List Excel file, LF1_ TransferList_FD08.xls, is located in **K:\OCA-up\transfer.**

Transfer Notes
The mini-workstation key strap that launched in the Ext A/L Floor should be moved to MF71K for return. You will see this update in the Transfer List tomorrow as item 503.1. Suggest moving this item after the post-EVA cleanup activities.

We understand the EMU gloves, S/N 6039, are not in Return Bag 445. Please look in Return Bags 444 (MPL2S4_K1) and 484 (not yet packed in MPLM as of FD08) for this pair of gloves. If the gloves are not in those two bags, check Return Bag 443 (where the other pair of gloves were removed).

-The Transfer Team-

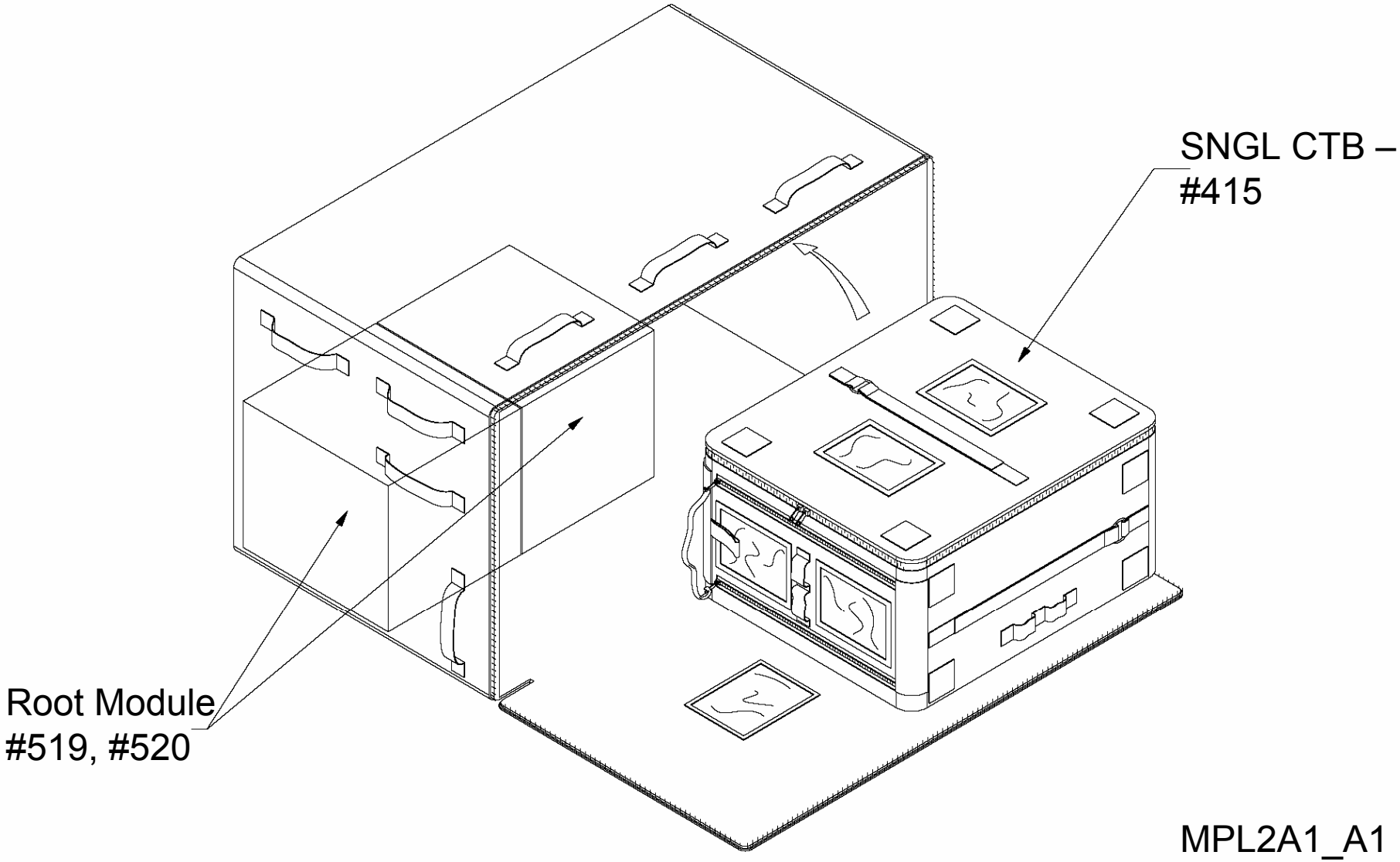


**Return Layout 12**

| SIZE | CAGE CODE | DWG NO | REV |
|---|---|---|---|
| C | 21356 | SEG32108646 | NC |
| SCALE N/A | ORG OC | FMT P02MAY04 | SHEET 2 OF 2 |

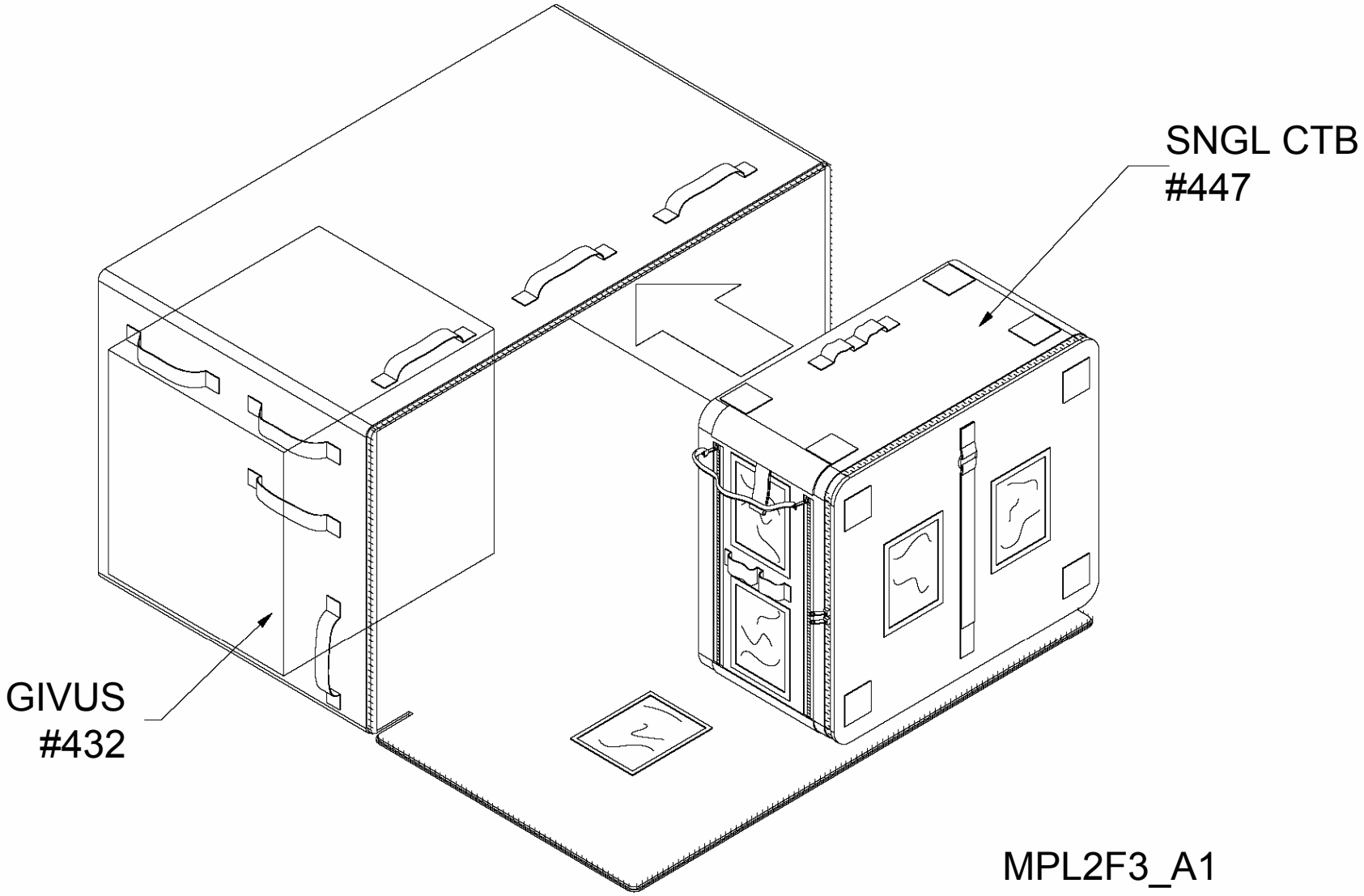


**Return Layout 36**

| SIZE | CAGE CODE | DWG NO | REV |
|---|---|---|---|
| C | 21356 | SEG32108661 | NC |
| SCALE N/A | ORG OC | FMT P02MAY04 | SHEET 2 OF 2 |

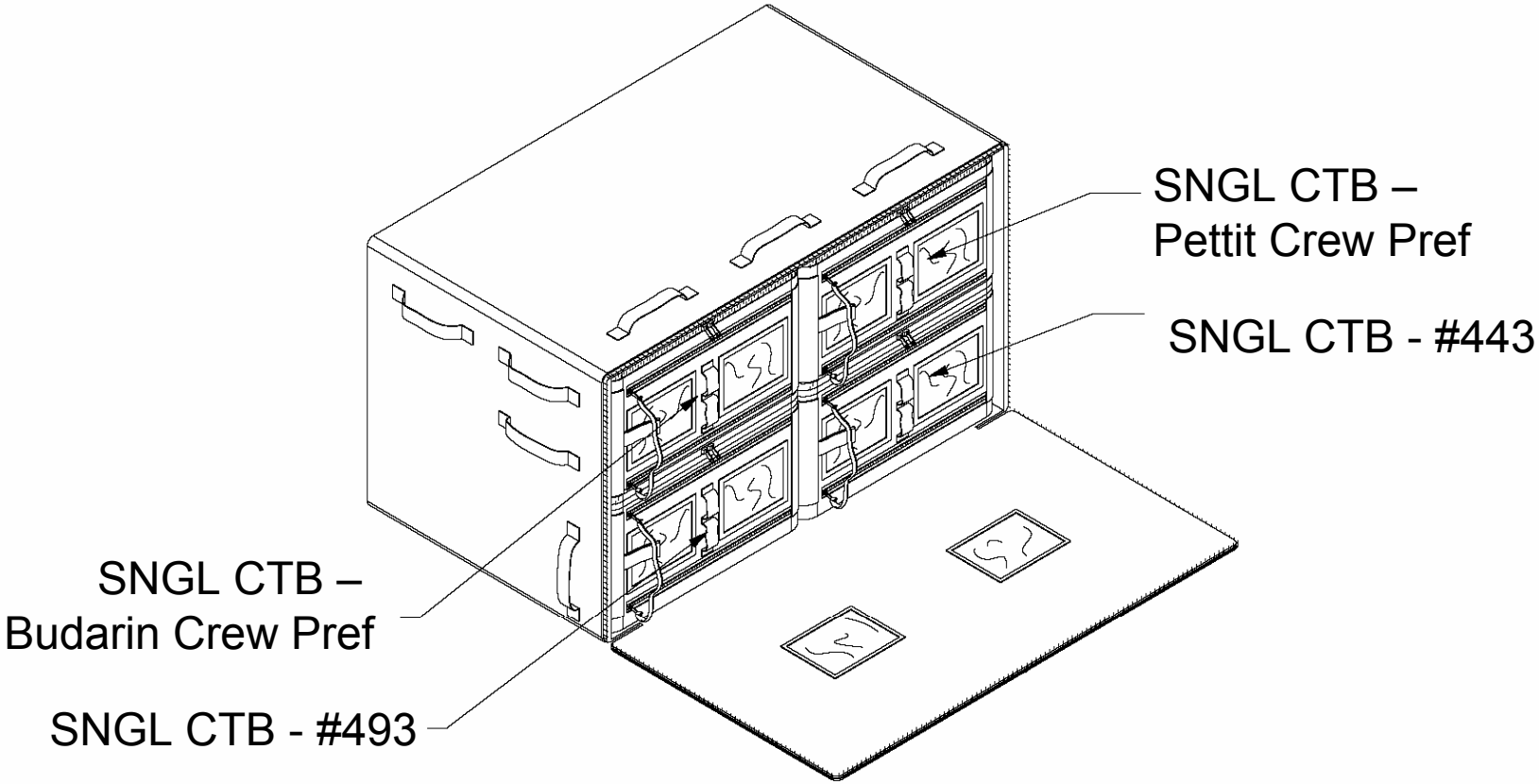


MPL2F4_H1

**Return Layout 42**

| SIZE | CAGE CODE | DWG NO | REV |
|---|---|---|---|
| C | 21356 | SEG32108603 | C |

| SCALE | ORG | FMT | SHEET |
|---|---|---|---|
| N/A | OC | P02MAY04 | 3 OF 3 |

# MSG 109A (11-0714A) - DELTAS TO PRE AND POST EVA PROCEDURES FOR EVA 3



**EVA 3 Prep Deltas:**

In order to protect the EMU from contamination we'd like you to perform the following actions during EVA PREP

1. Prior to connecting SCUs in Step 1 of EVA PREP (EVA, EVA PREP), page 4-3 , retrieve O2 Actuator Cover and install on EV2's DCM.

2. After step 31 in EMU PREBREATHE (EVA, EVA PREP) page 4-8, verify EV2 can reach the scissors on the right leg of his LTA.

**Post EVA 3 Deltas:**

Gap filler dust is an eye, skin, and mucus membrane irritant and may settle on EMU.

In the event that the hacksaw is used, perform the following actions in POST EVA (EVA, POST EVA), page FS 9-2.

3. Prior to opening the hatch in Step 1 of Post EVA, the IV should don eye protection, surgical gloves, and a surgical mask from the Contaminant Cleanup Kit (MA9N).

4. After opening the hatch in Step 1, and prior to configuring the duct work, wipe down the EMU gloves and TMG with moist towel. Dispose of towel in wet trash.

5. Prior to doffing eye protection, gloves, and mask remove gap filler from small trash bag and stow in ziplock bag. Stow for return; report stowage location to MCC.

MSG 110 - EVA 3 HACKSAW BLADE BEND ANGLE

Based on the downlinked photo of the hacksaw we need to verify that the hacksaw blade is bent to the proper angle. The blade should be bent so that the shoulder of the set screw mount on the handle does not interfere or touch the tile with the blade flat on the tile surface. This will ensure that the remaining gap filler is flush with the surface of the tile, and prevent additional damage caused by the saw. See the image below.

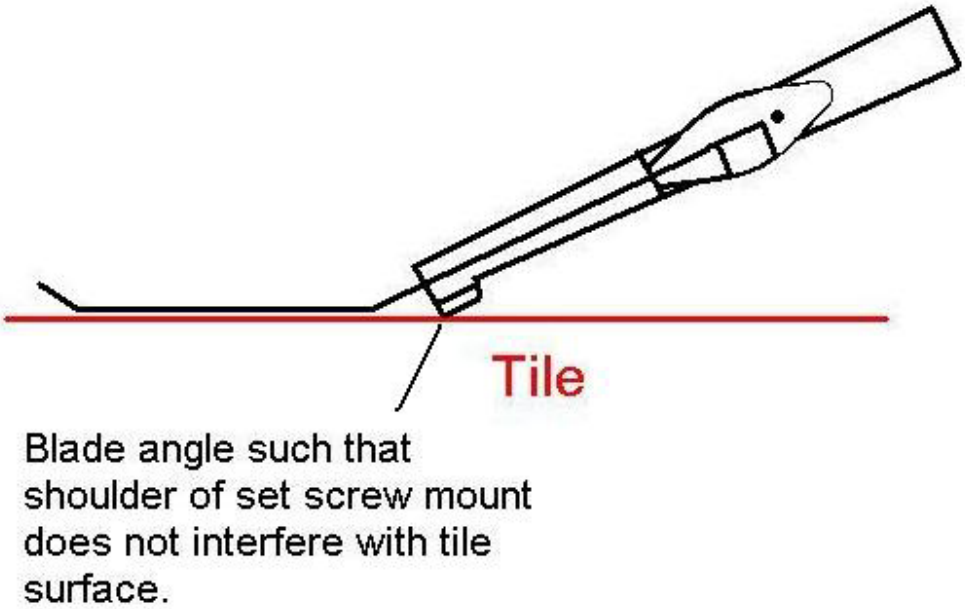

Here are the summary results of the FD8 MMT.

There were several miscellaneous items discussed today, none of which have any impact on you or what you are doing right now. These included a very good summary of the preliminary ET in-flight anomaly (IFA) items still being assessed and categorized, a discussion on backup attitude control on the ISS side during EVA 3, and a wrap-up of the RCC inspection and analyses work. The RCC has been cleared by the RCC PRT, and the MMT accepted that recommendation.

The only other item worthy of note is related to the W1 thermal blanket. As we mentioned a couple days ago the team is assessing the damaged blanket below W1. The analyses show that there is no local thermal concern with the existing damage, nor is there a local thermal concern if the blanket should become further damaged and detach during entry. We are still assessing whether or not we expect portions of the blanket to detach during entry and more time is needed to complete that work. Along with that are debris transport assessments to determine the potential areas of impact, as well as the associated structural test/analyses for areas such as the OMS pod and vertical stabilizer. The preliminary indications are that any debris liberated from this blanket would miss the vehicle entirely if it occurs above M 6, and the lower Mach regimes are being reviewed at this time. The current emphasis is on verification that the blanket will remain intact under the entry loads, stress, and thermal. We will continue to work on those aspects and let you know the results as they become available.

In the mean time we're really looking forward to watching EVA 3 today.

EVA 3 Choreography for Robotics and EVA

| GMT | SRMS | SSRMS | EV1 | EV2 |
|---|---|---|---|---|
| 07:09-07:24 | Msg 107 OBSS Tile Board Survey, steps 1-2 (Kelly, Camarda) | | | |
| 08:49-09:09 | Msg 107 OBSS Tile Board Survey, steps 3-4 (Camarda only) | | | |
| 08:54-09:04 | | RWS Setup (Kelly, Lawrence) | | |
| 09:04-09:19 | | 1.614 ESP2 Install, steps 1-4 (to RTL) (Kelly, Lawrence) | ESP2 Install | ESP2 Install |
| 09:19-09:49 | Msg 107 OBSS Tile Board Survey, steps 5-7 (Kelly, Camarda) | 1.614 ESP2 Install, steps 4-5 (Lawrence only) | | |
| 09:49-10:04 | | 1.615 ESP2 Ungrapple (Kelly, Lawrence) | MISSE 5 Install | FRGF Removal |
| 10:04-10:29 | | 11-0698A (Msg 90A) ESP2 Backoff to MBS PDGF 1 Pre-Grapple (Kelly, Lawrence) | | |
| 10:29-10:49 | | 2.430 Contingency WS4 MBS PDGF 1 Grapple, step 7-8 (Kelly, Lawrence) | | |
| 10:49-11:09 | Msg 107 OBSS Tile Board Survey, step 8 (Kelly, Camarda) | 2.430 Contingency WS4 MBS PDGF 1 Grapple, step 9-13 (Lawrence only) | RJMC Removal | Gap Filler Tool Prep |
| 11:09-11:24 | | 2.431 Contingency LAB PDGF Ungrapple (Kelly, Lawrence) | | |
| 11:29-14:24 | | 11-0700A (Msg 92A) EVA – Gap Filler Support (Kelly, Lawrence) | Comm Assist & ISS Tasks | Gap Filler Removal |
| 14:24-14:34 | Msg 107 OBSS Tile Board Survey, steps 9-10 (Kelly, Camarda) | | Cleanup & Ingress | Cleanup & Ingress |
| 15:39-16:09 | | 1.413 Lab PDGF Grapple, step 5 (Kelly, Lawrence) | | |